DISPLAYS

MIXED-SIGNAL DESIGN SOLUTIONS

Data Sheets • Applications Notes • Free Samples

5th EDITION

Maxim Offers the Most Comprehensive Selection of Products for LED, LCD, Backlight, and VFD Displays

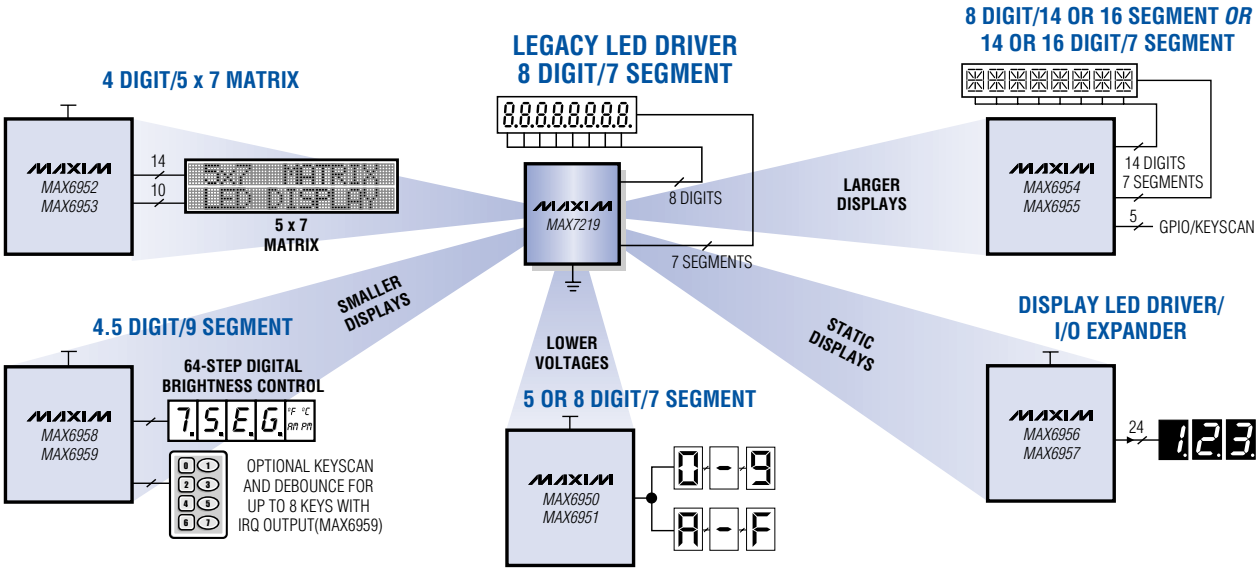

Part	Interface (Hz)	Supply (V)	Display Type	Total No. of LEDs	Fonts	Applications	Package
MAX6950	26M SPI™	2.7 to 5.5	5 digit/7 segment + DP	40	Hex	Panel meters, set-top boxes, white goods, cell phones	16-QSOP
MAX6951	26M SPI	2.7 to 5.5	8 digit/7 segment + DP	64	Hex		
MAX6952/ MAX6953	26M SPI/400k I²C‡	2.7 to 5.5	4 digit/5 x 7 matrix	140	104 fixed plus 24 user-definable characters	Audio/video and industrial equip., message boards	40-DIP/ 36-SSOP
MAX6954/ MAX6955	26M SPI/400k I²C	2.7 to 5.5	16 digit/7 segment + DP 8 digit/14 or 16 segment + DP	128	104 fixed plus 24 user-definable characters	Audio/video, set-top boxes, white goods	40-DIP/ 36-SSOP
MAX6956/ MAX6957	400k I²C/26M SPI	2.7 to 5.5	Static (any type)	20 or 28	—	Automotive and industrial equip., panel meters	28-DIP/SSOP 40-DIP/36-SSOP
MAX6958/ MAX6959	400k I²C	3 to 5.5	4.5 digit/7 segment + DP	36/32	Hex	Audio/video and industrial equip., vending machines	16-DIP/QSOP
MAX7219	10M, 4-wire serial	4 to 5.5	8 digit/7 segment + DP	64	Code 8	Panel meters	24-PDIP/SO

SPI is a trademark of Motorola, Inc.

‡Purchase of I²C components from Maxim Integrated Products, Inc., or one of its sublicensed Associated Companies, conveys a license under the Philips I²C Patent Rights to use these components in an I²C system, provided that the system conforms to the I²C Standard Specification defined by Philips.

The Maxim logo is a registered trademark of Maxim Integrated Products, Inc. The Dallas Semiconductor logo is a registered trademark of Dallas Semiconductor Corp.
© 2006 Maxim Integrated Products, Inc. All rights reserved.

DALLAS SEMICONDUCTOR MAXIM

Industry-Standard GPIO/LED Drivers Require No External Devices to Drive RGB, White, and Backlight LEDs

Simplify Your Design Using +125°C-Rated Pin-for-Pin Upgrades with PWM Control

Maxim's GPIO and I²C port expanders are available in industry-standard pinouts with superset features such as lower voltage operation, integrated 8-bit PWM control, +125°C operation, space-saving TQFN packages as small as 3mm x 3mm x 0.8mm, and expanded I²C slave ID selection. Our port expanders operate at the fast 400kHz I²C bus, as well as at 100kHz. Also, each port sinks at least 10mA, with some products capable of sinking up to 75mA. Maxim I/O expanders have either I²C bus-timeout circuits or I²C RST inputs to recover from I²C lockups. Maxim offers a broad choice in I/O expanders from 8 to 28 ports, and our nonobsolescence policy means you will never have to qualify another source.

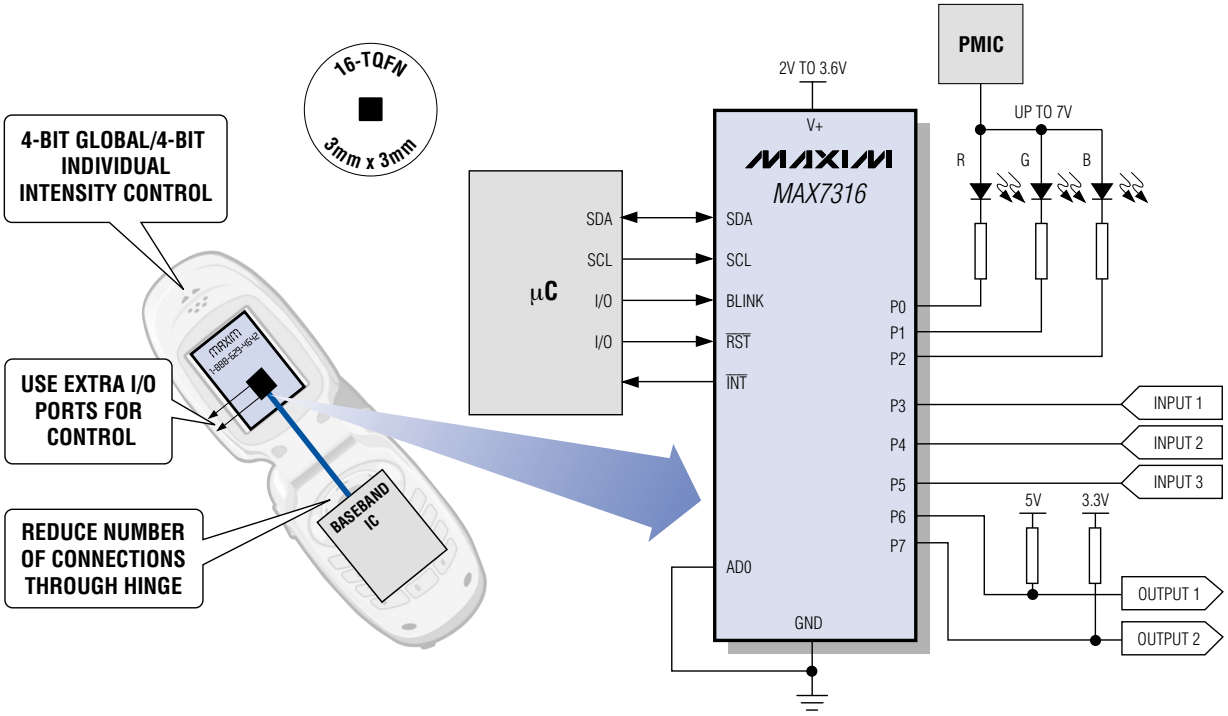

Part	Compatible with	No. of I/O Ports	I²C Bus Speed (kHz, max)	Maximum Sink Current (mA, per pin)	Maximum Standby Current (µA at +125°C)	Unique Maxim Features
MAX7315	PCA9534	8	400	50	3.3	**64 slave IDs, 2.0V operation, PWM**
MAX7312	PCA9535	16	400	75	12	**64 slave IDs, 2.0V operation, bus timeout**
MAX7313		16	400	50	3.6	**64 slave IDs, 2.0V operation, PWM**
MAX7311	PCA9555	16	400	75	12	**64 slave IDs, 2.0V operation, bus timeout**
MAX7318		16	400	75	12	**64 slave IDs, 2.0V operation**
MAX7310	PCA9556	8	400	45	3.9	**56 slave IDs, bus timeout**
MAX7300/1	—	20/28	400/SPI	10	11	**16 slave IDs**
MAX6956/7	—	20/28	400/SPI	10	11	**16 slave IDs**

See Our Entire Range of GPIO Port Expanders on the Web at:
www.maxim-ic.com/GPIO

DALLAS SEMICONDUCTOR MAXIM

Drive RGB or White LEDs Directly from Battery to Save System Cost

Tiny, 3mm x 3mm TQFN and Low Standby Current (< 1µA, typ) Are Ideal for Portable Applications

The MAX6966/MAX6967 are ideal for driving RGB or white LEDs. Each port has 1.5% accurate constant-current drive, which matches brightness among LEDs and eliminates the need for external current-limiting resistors. So now, LEDs can be powered directly from the battery or power-management IC. Fade all LEDs up or down with an automatically initiated hardware (or software) command while the main microprocessor sleeps. Cascade multiple MAX6966s using the D_{OUT} pin and one $\overline{CS}$ line. Also, synchronize system noise with the MAX6967's OSC input, which can be used as an alternate PWM clock up to 100kHz instead of the internal 32kHz oscillator. Optional phase shifting between PWM outputs reduces the peak demand on the power supply.

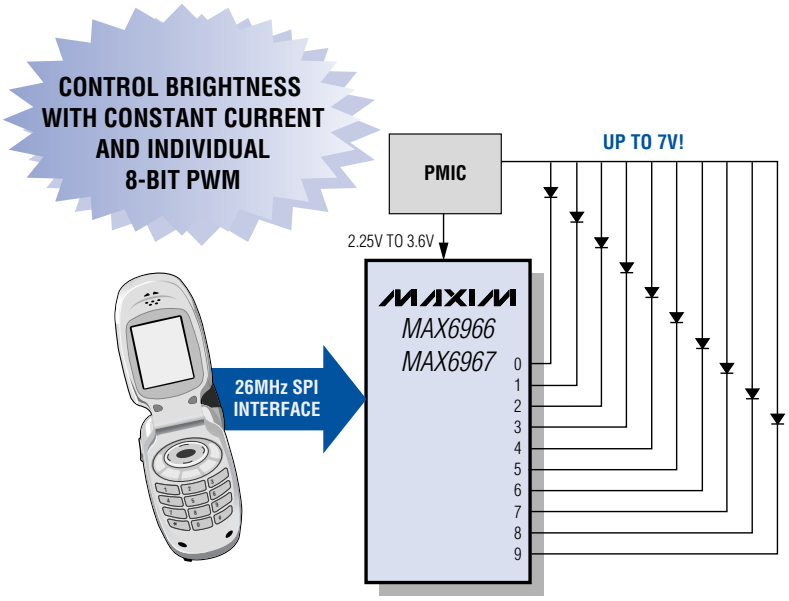

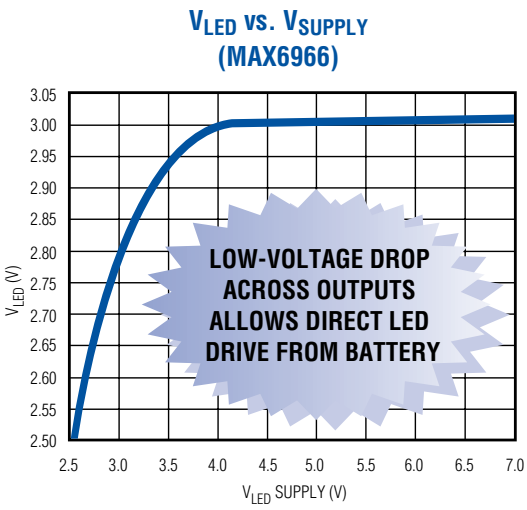

- Programmable Fade Up and Down
- I/O Capability on Every Port
- I/Os Support Hot Insertion
- -40°C to +125°C Temperature Range
- 1.5% Current Match Among Ports
- Low Standby Current (< 2µA, max)
- Up to 20mA Constant Current per Port
- 7V-Tolerant Outputs

Part	No. of Ports/Tolerance	Supply Voltage (V)	Constant-Current Drive	PWM (Bit)	OSC Input	D_{OUT} Output	Package
MAX6966	10/7V	2.25 to 3.6	Yes	8	—	Yes	16-TQFN/QSOP
MAX6967	10/7V	2.25 to 3.6	Yes	8	Yes	—	16-TQFN/QSOP
MAX7317	10/7V	2.25 to 3.6	—	—	—	Yes	16-TQFN/QSOP

For Information on Maxim's Complete Line of Display Products, Go to:
www.maxim-ic.com/Displays

Low-Noise, Low-EMI, Key-Switch Controllers Support Up to 64 Keys

The MAX7347/MAX7348/MAX7349 key-switch controllers monitor and debounce 24, 40, or 64 keys, respectively. Static key monitoring ensures low EMI for noise-sensitive applications. That, along with low current, makes these controllers the optimal solution for cell phones and PDAs. The interrupt out ($\overline{INT}$) can be configured to alert key presses as they occur or at a programmable minimum interval. An integrated sounder driver can generate automatic key-click sounds. The programmable tones cover the 5th musical octave (587Hz to 987Hz) and seven additional musical notes up to 2.6kHz. The sounder output can also be programmed to operate an electronic sounder, relay, or lamp for a set time instead of generating a frequency. The devices have a 400kHz, I^2C-compatible serial interface with bus timeout for lockup-free operation. The ICs function from a 2.7V to 3.6V supply range, and are specified over the automotive temperature range (-40°C to +125°C).

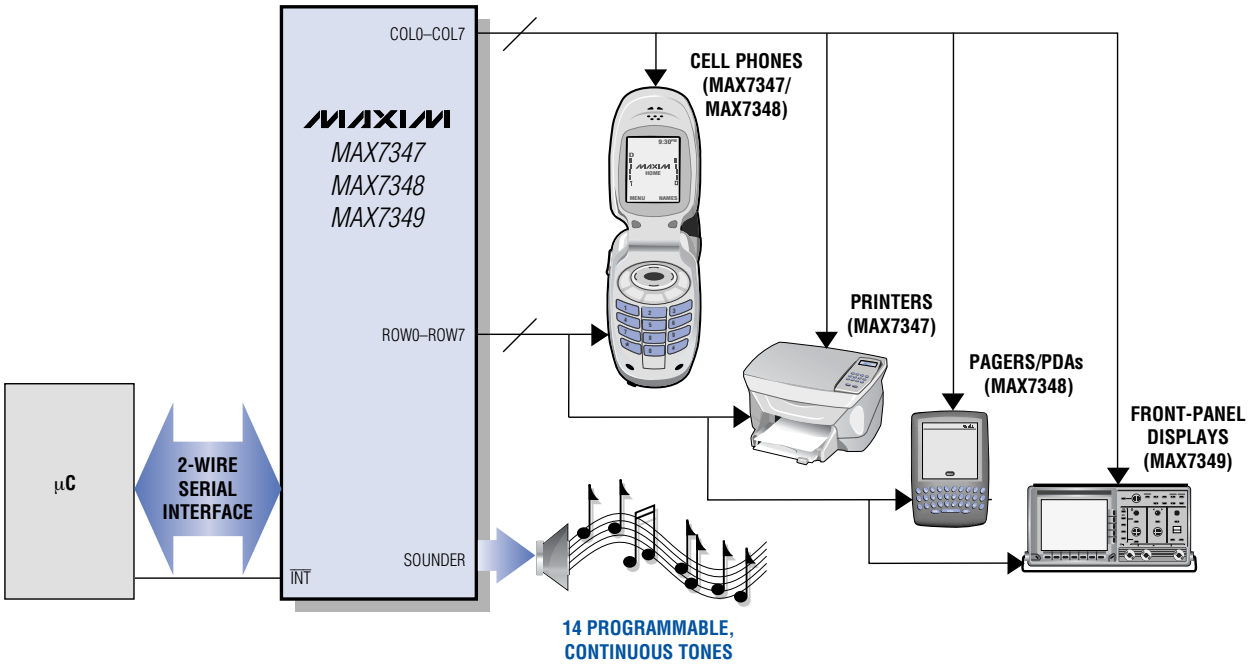

Key-Switch Controllers

- **Eight-Key FIFO Stores Debounced Key-Switch Events**
- **Integrated Ghost-Key Elimination**
- **Programmable Debounce Duration and Key Autorepeat**

Sounder Generator

- **Musical Tone Generator**
- **Two-Tone Sound Generation**
- **Automatic Key-Tone Generation for Key-Click Audible Feedback**

Part	No. of Keys Monitored	No. of GPIOs	Temp Range (°C)	Package
MAX7347AEE	Up to 24	1	-40 to +125	16-QSOP
MAX7348AEP	Up to 40	3	-40 to +125	20-QSOP
MAX7349AEG	Up to 64	6	-40 to +125	24-QSOP
MAX7349ANG	Up to 64	6	-40 to +125	24-PDIP

DALLAS SEMICONDUCTOR MAXIM

8-/16-Port Constant-Current LED Drivers Feature Optional Open-LED Fault Detect and Watchdog

All Use Industry-Standard Pin-Outs for Industrial Lighting, Signage, and Transportation Applications

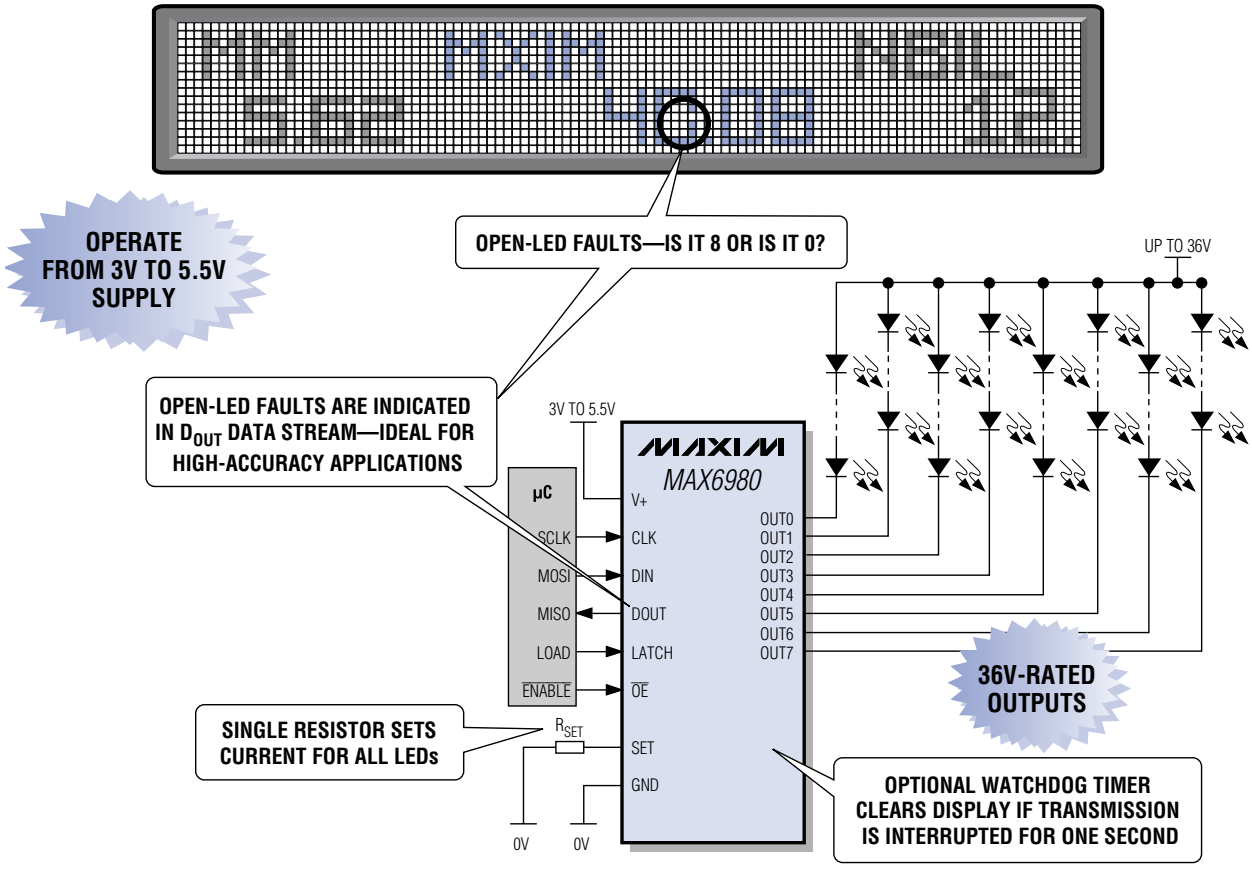

Part	No. of Outputs	Max Output Voltage	Max Output Current	LED Fault Detection	Watchdog	Temp Range
MAX6968	8	5.5V	55mA	—	—	-40°C to +125°C
MAX6977				Yes	—	
MAX6978				Yes	Yes	
MAX6970		36V		—	—	
MAX6981				Yes	—	
MAX6980				Yes	Yes	
MAX6969	16	5.5V		—	—	
MAX6979				Yes	Yes	
MAX6971		36V		—	—	
MAX6983				Yes	Yes	

Wide Range of Features Makes GPIOs a Lower Cost Solution than Microprocessors

GPIOs with Transition Detection, Maskable Interrupt, Serial Interface, and Small Size Ease Routing and Add Flexibility to System Design

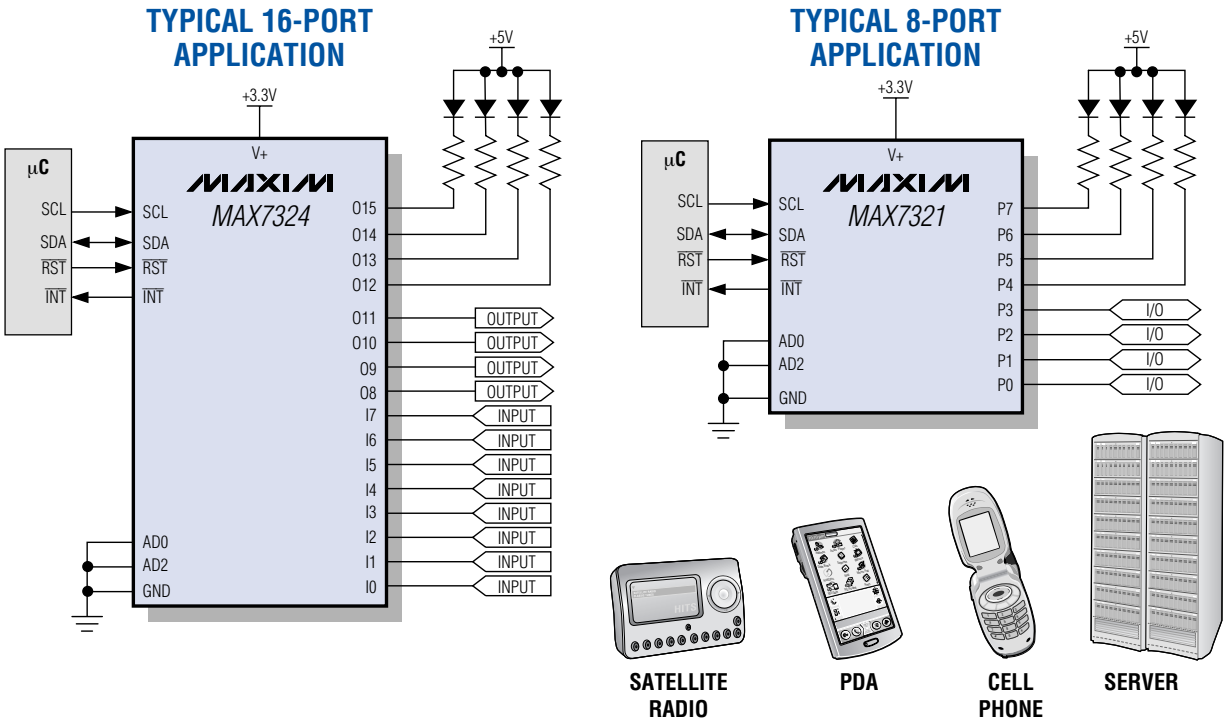

- Port Transition Detection
- Interrupt Mask Selects Which Inputs Assert $\overline{INT}$
- 1.71V to 5.5V Operation
- -40°C to +125°C Temp Range
- Hot-Insertion Protected
- Low-Power Shutdown

8 PORTS

16 PORTS

Part	$\overline{RST}$ Input	No. of Inputs	Interrupt Mask	No. of Open-Drain Outputs	No. of Push-Pull Outputs	Package
MAX7319	✓	8	✓	–	–	16-QSOP/TQFN
MAX7320	✓	–	–	–	8	16-QSOP/TQFN
MAX7321	✓	Up to 8	–	Up to 8	–	16-QSOP/TQFN
MAX7322	✓	4	✓	–	4	16-QSOP/TQFN
MAX7323	✓	Up to 4	–	Up to 4	4	16-QSOP/TQFN
MAX7328*	–	Up to 8	–	Up to 8	–	20-SSOP/16-W-SO
MAX7329**	–	Up to 8	–	Up to 8	–	20-SSOP/16-W-SO
MAX7324	✓	8	✓	–	8	24-QSOP/TQFN
MAX7325	✓	Up to 8	–	Up to 8	8	24-QSOP/TQFN
MAX7326	✓	4	✓	–	12	24-QSOP/TQFN
MAX7327	✓	Up to 4	–	Up to 4	12	24-QSOP/TQFN

16-TQFN 3mm x 3mm

24-TQFN 4mm x 4mm

*PCF8574 2nd source.
**PCF8574A 2nd source.

Drive 8 x 8 LED Tiles with 16 Colors per Pixel and Up to 63 Frames per Second

Drivers Appear as Contiguous Display RAM, Simplifying Picture Control

The MAX6960–MAX6963 are compact, dot matrix, LED drivers that interface to one bicolor tile or two monocolor 8 x 8 LED tiles. The 20MHz SPI-compatible interface connects up to 256 drivers serially with display memory mapping automatically shared and allocated among the drivers. On power-up, the devices synchronize themselves and allocate memory addresses to suit the display architecture. The devices feature open and short-circuit LED detection, and provide both analog and 256-step digital calibration so 8 x 8 displays from different batches can be compensated and color matched.

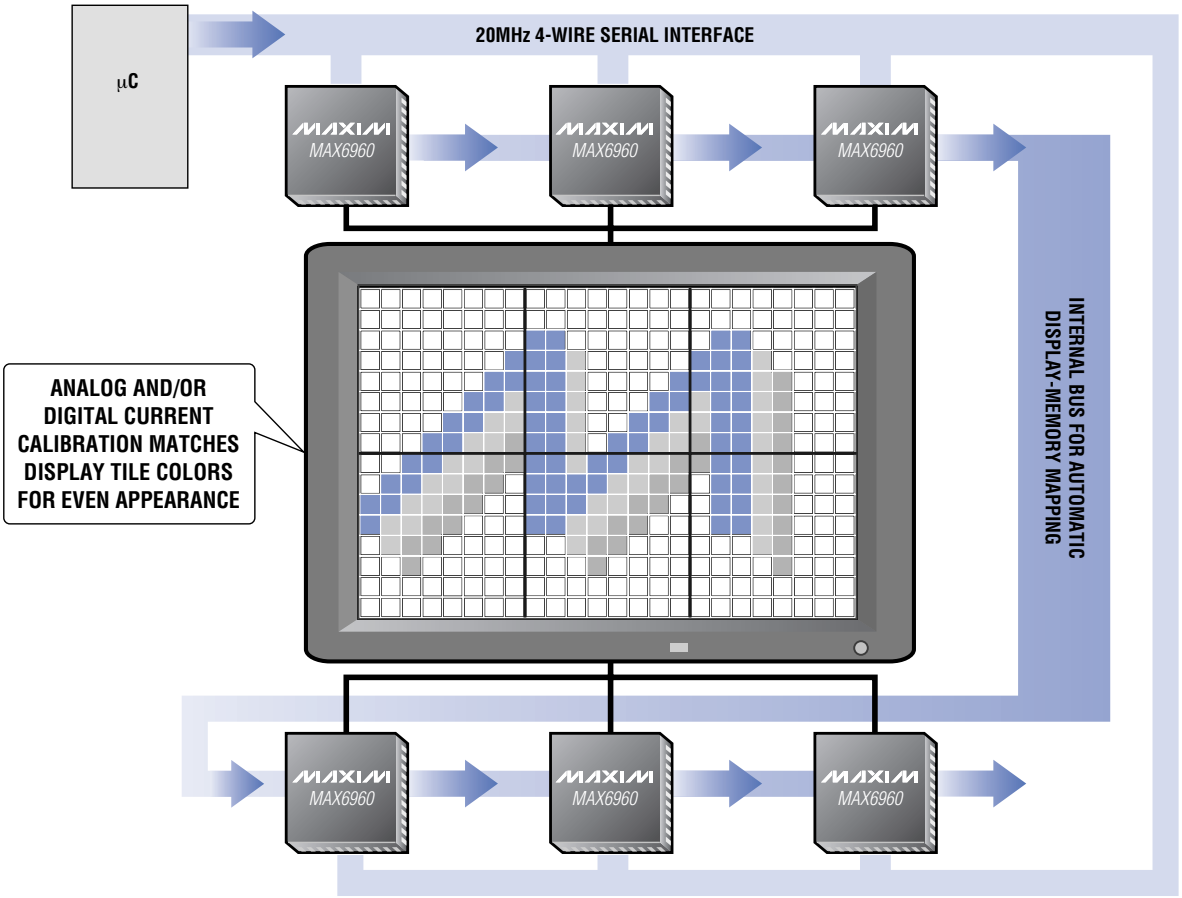

- **Four Memory Planes for Automated Animation**
- **20MHz 4-Wire Interface**
- **20mA or 40mA Peak Pixel Current**
- **Slew-Rate-Limited Drivers Reduce EMI**
- **7mm x 7mm TQFN Allows 2W Dissipation**

Part	No. of LEDs	No. of Monocolor Tiles	No. of Bicolor Tiles	Intensity Level(s) per Color	Global Intensity Levels	Package
MAX6960/MAX6961	128	2	1	4/1	256	44-TQFN/MQFP
MAX6962/MAX6963	128	2	—	4/1	256	44-TQFN/MQFP

FUTURE PRODUCTS

High-Power, PWM LED Drivers Provide High Resolution for LED Displays

Individual-Pixel, Panel (Global), and Calibration Adjustments Provide Maximum Flexibility for the Lowest Cost High-Resolution Displays

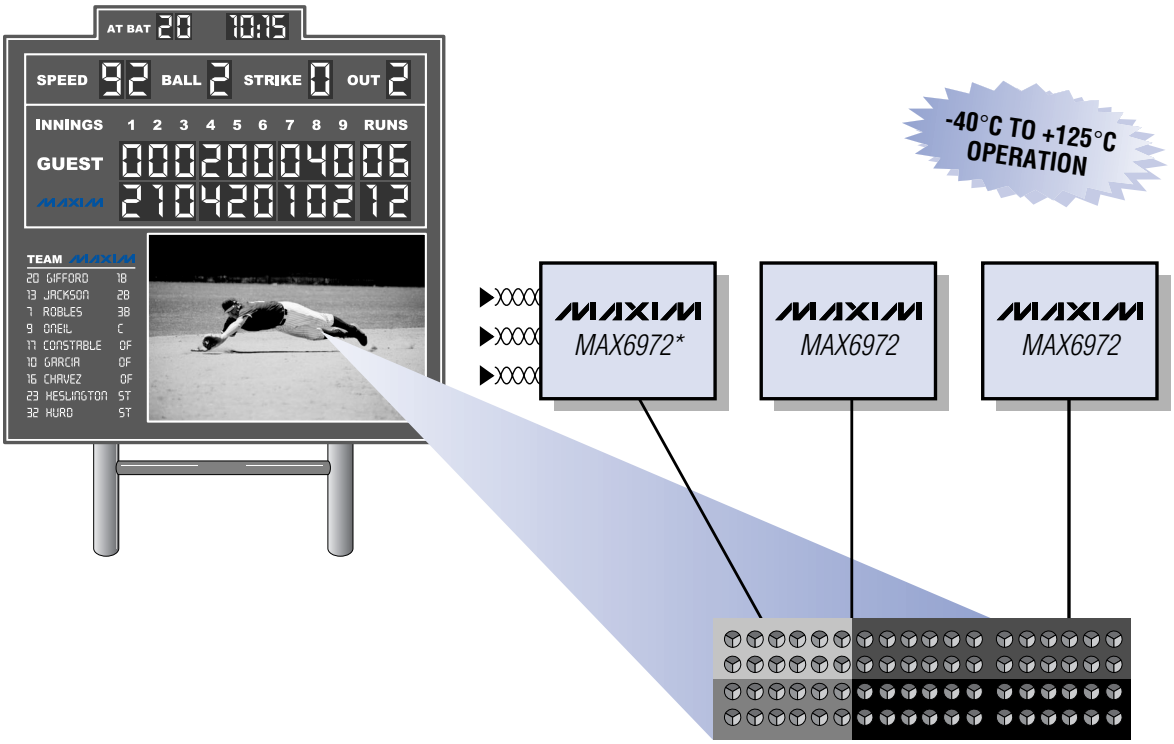

- EZCascade™ Enables Unlimited Components to Be Cascaded with No Additional Clock or Data Drivers
- Slew-Rate-Limited Drivers Reduce EMI
- Drive Two Different Output Banks
- Internal Watchdog Can Be Configured to Blank Display on Loss-of-Signal Input
- ±1% Output-to-Output Current Matching
- 11mA to 55mA Constant-Current Outputs

Part	No. of Outputs	No. of PWM Bits (Global)	No. of PWM Bits (Individual)	Package
MAX6972*	16	7	12	32-TQFN
MAX6973*	16	5	14	32-TQFN
MAX6974*	24	7	12	40-TQFN
MAX6975*	24	5	14	40-TQFN

*Future product—contact factory for availability.
EZCascade is a trademark of Maxim Integrated Products, Inc.

NEW

21-Bit Serializers/Deserializers Now Have Hot-Swappable Inputs and "On-the-Fly" Frequency Programming

Up to 768 x 1024 Resolution; DC-Balanced Mode Ideal for Automotive Apps

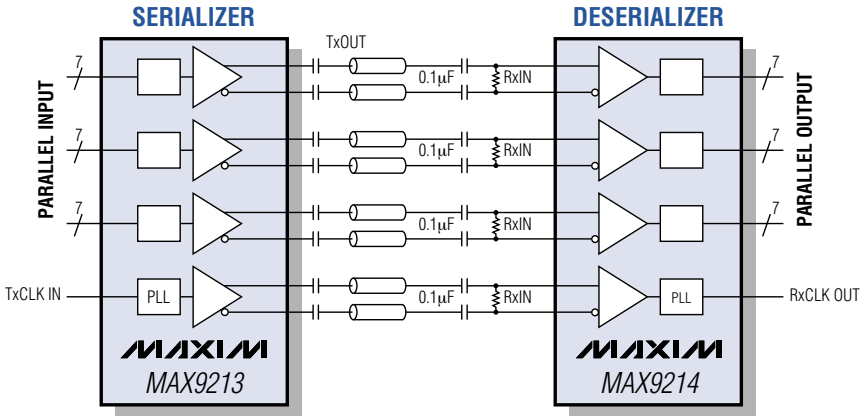

GPS

- DC-Balanced Coding Allows AC-Coupling to Tolerate Ground Shift Between Serializer and Deserializer, and Provides Short-to-Battery Protection
- 10m Cable-Drive Capability at 600Mbps per Data Channel
- Integrated 110Ω (typ) Serializer Differential Output Resistance in DC-Balanced Mode Reduces Reflections
- Programmable DC-Balanced or Non-DC-Balanced Operation
- High ESD Protection on LVDS I/Os
  - IEC 61000-4-2 Level 4 ESD (±15kV Air, ±8kV Contact Discharge)
  - ISO 10605 (±25kV Air, ±8kV Contact Discharge)

Part	Parallel Interface (Bits)	f_{MAX} DC-Balanced (MHz)	f_{MAX} Non-DC-Balanced (MHz)	Non-DC-Balanced, Pin-Compatible Upgrade to	Package
Serializers					
MAX9205	10	—	16 to 40	DS92LV1021A	28-SSOP
MAX9207	10	—	40 to 66	DS92LV1023	28-SSOP
MAX9209	21	8 to 34	10 to 40	DS90CR215	48-TSSOP
MAX9213	21	16 to 66	20 to 85	DS90CR217	48-TSSOP
Deserializers					
MAX9206	10	—	16 to 40	DS92LV1212A	28-SSOP
MAX9208	10	—	40 to 60	DS92LV1224	28-SSOP
MAX9210	21	8 to 34	10 to 40	DS90CR216A	48-TSSOP
MAX9214	21	16 to 66	20 to 85	DS90CR218A	48-TSSOP
MAX9220	21	8 to 34	10 to 40	Falling-edge strobe	48-TSSOP
MAX9222	21	16 to 66	20 to 85	Falling-edge strobe	48-TSSOP
MAX9234	21	8 to 34	—	DS90CR216A	48-TSSOP
MAX9236	21	8 to 34	—	Falling-edge strobe	48-TSSOP
MAX9238	21	16 to 66	—	Falling-edge strobe	48-TSSOP

NEW HOT-SWAPPABLE/ PLUGGABLE INPUTS

For More Information on Serializer/Deserializers
Go to: www.maxim-ic.com/sdauto

NEW Low-Power, Single-Link Serdes Reduces Hinge Interconnect and EMI

Ideal for QVGA and QCIF 320 x 240 Resolution Displays

The MAX9223/MAX9225* serializers and MAX9224/MAX9226* deserializers communicate over a single differential link, greatly reducing the number of interconnect wires, improving reliability, reducing cost, and reducing EMI. The MAX9223/MAX9224 chipset serializes the parallel interface of an LCD controller or an image sensor, making it ideal for driving QVGA and QCIF displays.

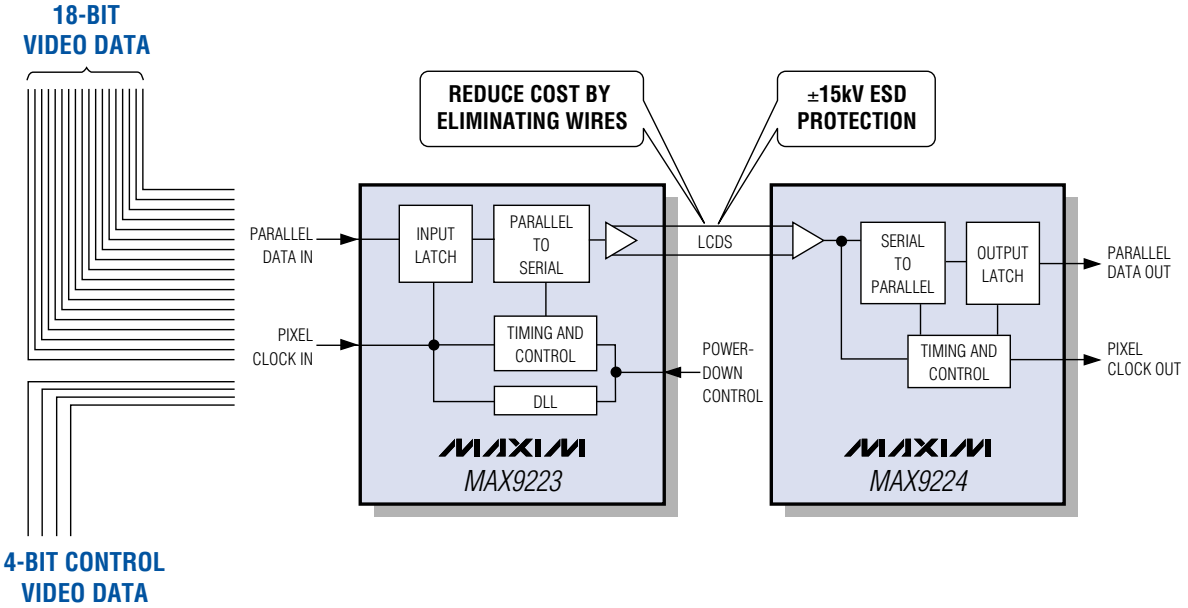

- **Ideal for Serializing Cell Phone LCD or Imager Parallel Interface**
- **LCD Interface (22-Bit MAX9223/MAX9224)**
- **Camera Interface (10-Bit MAX9225/MAX9226)**
- **Low-Current Differential Signaling (LCDS) Rejects Common-Mode Noise, Reduces EMI**
- **0.5µA (max) Power-Down Supply Current**
- **+2.375V to +3.465V Core Supply Voltage**
- **Parallel I/O Interfaces Directly to 1.8V to 3.3V Logic**
- **±15kV ESD Protection (Human Body Model)**

Part	Description	Parallel Clock (MHz)	Serial Data Rate (Mbps)	Package (mm x mm x mm)
MAX9223	22-bit serializer	5 to 10	110 to 220	28-TQFN (4 x 4 x 0.8)
MAX9224	22-bit deserializer	5 to 10	110 to 220	28-TQFN (4 x 4 x 0.8)
MAX9225*	10-bit serializer	10 to 20	100 to 200	16-TQFN (3 x 3 x 0.8)
MAX9226*	10-bit deserializer	10 to 20	100 to 200	16-TQFN (3 x 3 x 0.8)

For More Information on Cellular Solutions, Go to:
www.maxim-ic.com/cellular_serdes

*Future product—contact factory for availability.

27-Bit LVDS Chipset Has Enhanced ESD Protection

Ideal for LCDs Up to 480 x 800 Resolution

EE TIMES ULTIMATE PRODUCT-OF-THE-YEAR AWARD: ANALOG ICs

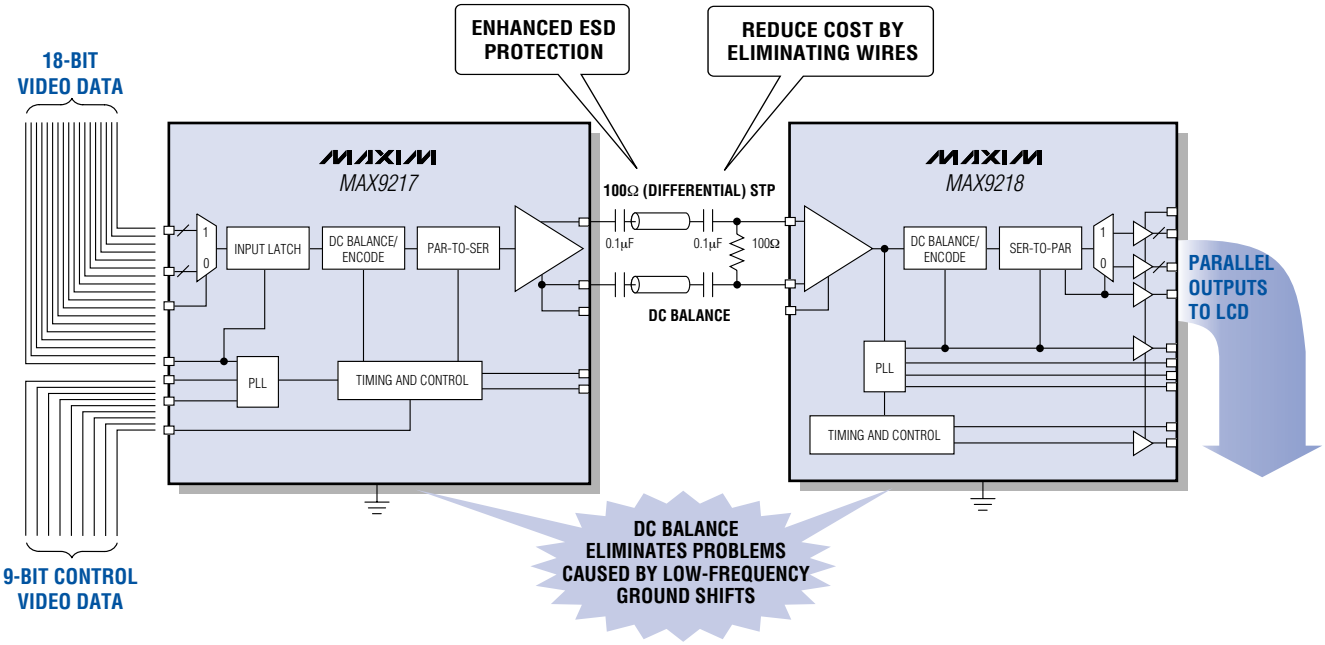

- 10m, STP Cable-Drive Capability
- Deserializer Output-Transition Time Scaled to Operating Frequency Range for Reduced EMI
- LVDS I/Os Meet ISO 10605 (±30kV Air, ±10kV Contact) ESD Standard
- Deserializer Clock-Pulse Stretch on Lock
- Data Coding Reduces EMI
- Serial-Output, Common-Mode Filter Reduces EMI
- Integrated 100Ω Serializer Differential Output Impedance Reduces Reflections

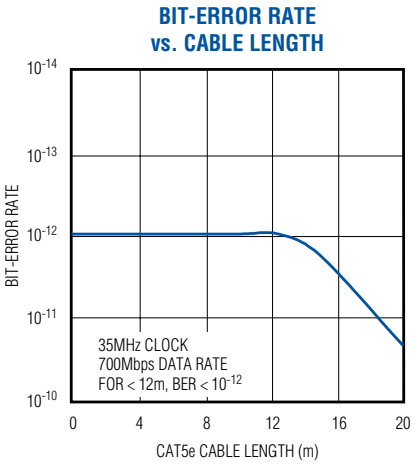

For More Information on the MAX9217, Go to:
www.maxim-ic.com/max9217

Smallest High-Brightness LED Driver Simplifies Lighting Design

40V, 350mA, Adjustable Linear LED Driver Saves 85% Board Space Compared to the Competition

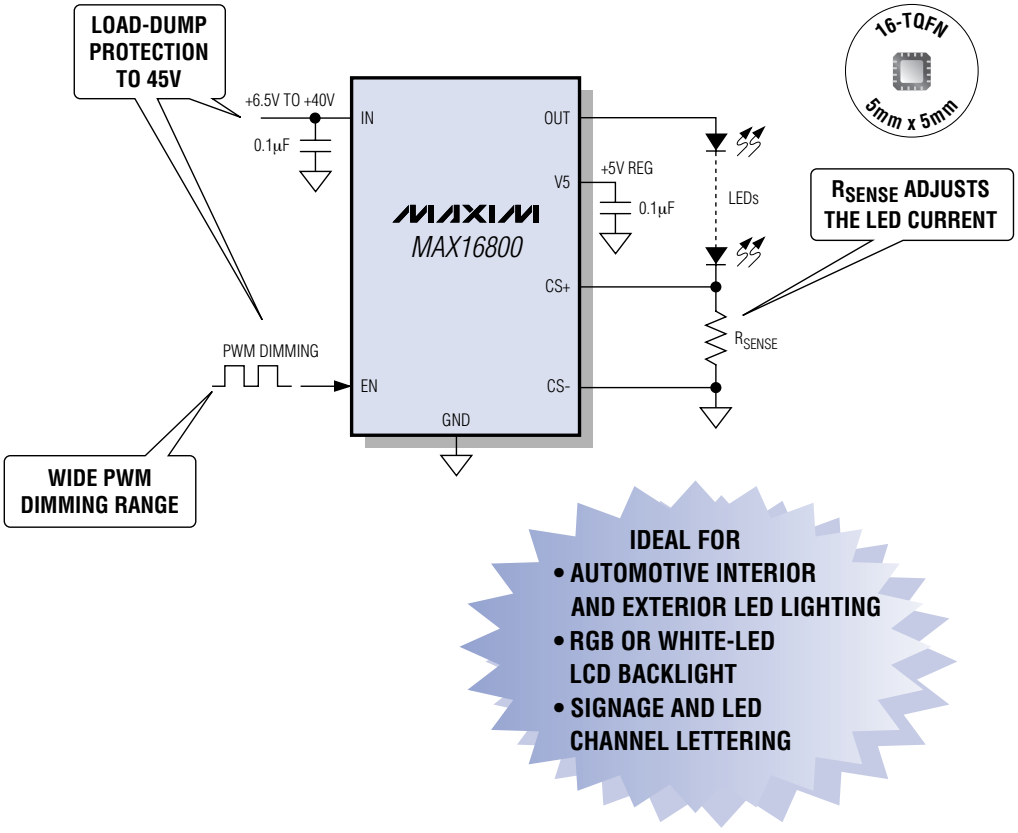

- Constant Current Up to 350mA
- ±3.5% LED Current Accuracy
- Low Dropout Voltage (< 1V, typ)
- Low 200mV Current-Sense Reference Minimizes Power Dissipation
- Works Down to +5V for Automotive Cold Cranking
- Short-Circuit Protection
- Thermal Shutdown Operates from -40°C to +125°C

For Additional High-Brightness LED Drivers, Go to:
www.maxim-ic.com/HB_LED

Universal High-Brightness LED Drivers Cover Wide Input-Voltage Range

Capable of Dimming and High Current Accuracy

Applications for MAX16801

- Flat-Panel and RGB Display Backlighting
- Outdoor and Industrial Lighting
- Architectural and Decorative Lighting

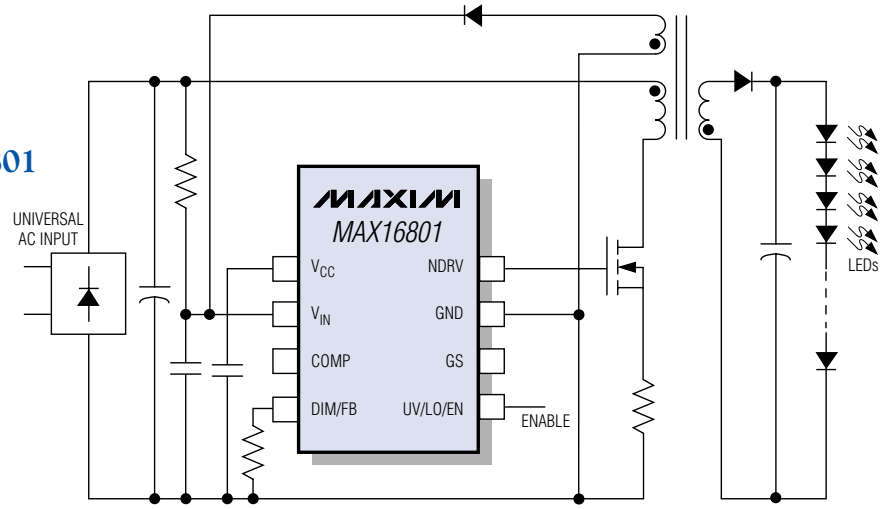

Applications for MAX16802

- LED Track Lighting
- LED and LCD Backlighting
- General Lighting

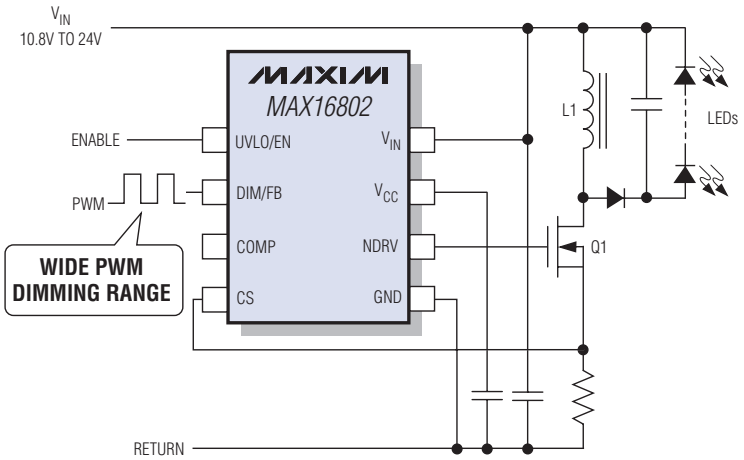

- Universal 85V to 265V AC Input-Voltage Range (MAX16801)
- Wide DC Input-Voltage Range (MAX16802)
- Fixed-Frequency LED Current Control
- PWM and Linear Dimming
- Internal Error Amplifier for High-Accuracy Current Regulation
- Drive Multiple Strings of LEDs
- Thermal Shutdown
- Available in Tiny, 8-Pin µMAX® Package

For Additional High-Brightness LED Drivers, Go to:
www.maxim-ic.com/HB_LED

µMAX is a registered trademark of Maxim Integrated Products, Inc.

Highest Current I²C Charge Pump for WLEDs

Delivers Up to 610mA for Main, Flash, and Sub/RGB Lights

The MAX1707 is the highest power light-management IC (LMIC) that uses an I²C interface to drive all the LEDs in a cell phone. It drives WLEDs with excellent current matching for main and subdisplay backlighting and camera flash. The RGB LED control provides 32k colors to render smooth color transitions. The charge pump uses proprietary adaptive 1x/1.5x/2x modes and low-dropout current regulators to drive up to seven LEDs for main and subdisplays, achieving current matching of 0.3% and up to 92% efficiency (83% average over battery life). Simultaneously, it supports up to 400mA for camera flashes using multi-LED modules or single high-brightness LEDs.

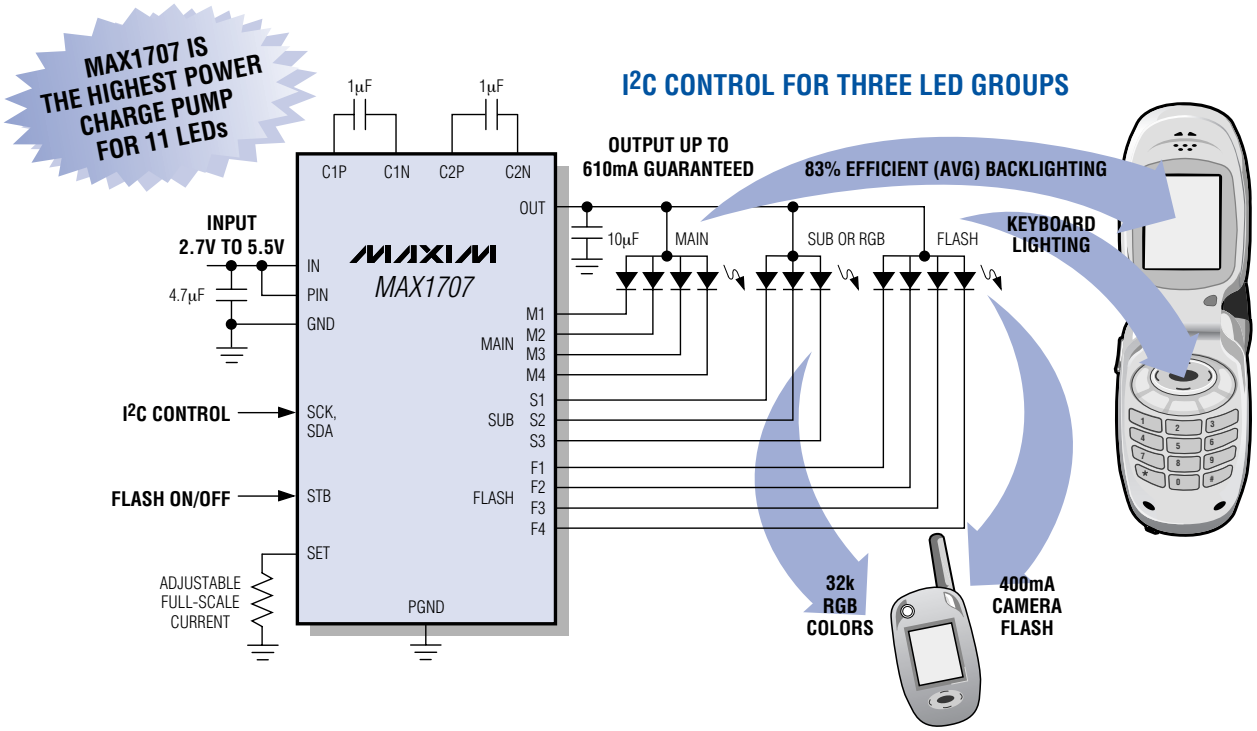

- Guaranteed 610mA Output Drive
- I²C Full Programmability
- 92% Peak (83% Avg) Efficiency (P_{LED}/P_{BATT}) Over Li+ Battery Life
- ±0.3% Current Accuracy
- Soft-Start Limits Inrush Current
- Output Overvoltage Protection
- Thermal Derating Function Protects LEDs
- 4mm x 4mm, 24-Pin TQFN
- Priced at $2.70†

FOR MORE WHITE-LED DRIVER INFORMATION, GO TO: www.maxim-ic.com/whiteLED

†2500-up recommended resale, FOB USA. Prices provided are for design guidance and are for the lowest grade, commercial temperature parts. International prices will differ due to local duties, taxes, and exchange rates. Prices are subject to change. Not all packages are offered in 1k increments, and some may require minimum order quantities.

First Dual-Display, White-LED Driver with Dual, 32-Step Dimming

Highly Accurate Dimming Down to 3% of Full Scale; Fits in 3mm x 3mm TDFN

The MAX8630Z is the most compact current-regulating charge pump for driving up to three white LEDs in the main display, and up to two white LEDs in the subdisplay for color LCD backlighting. To minimize external components, this charge pump contains two single-wire, serial-pulse inputs for dimming brightness in 32 linear steps. It requires no external MOSFET switches and no complicated software protocols.

The MAX8630Z utilizes the adaptive 1x/1.5x modes and very-low-dropout active-current regulators to achieve 93% peak efficiency and 85% average efficiency over the full one-cell lithium (Li+) battery input-voltage range. LED current accuracy is 1.0% (max) for uniform backlighting.

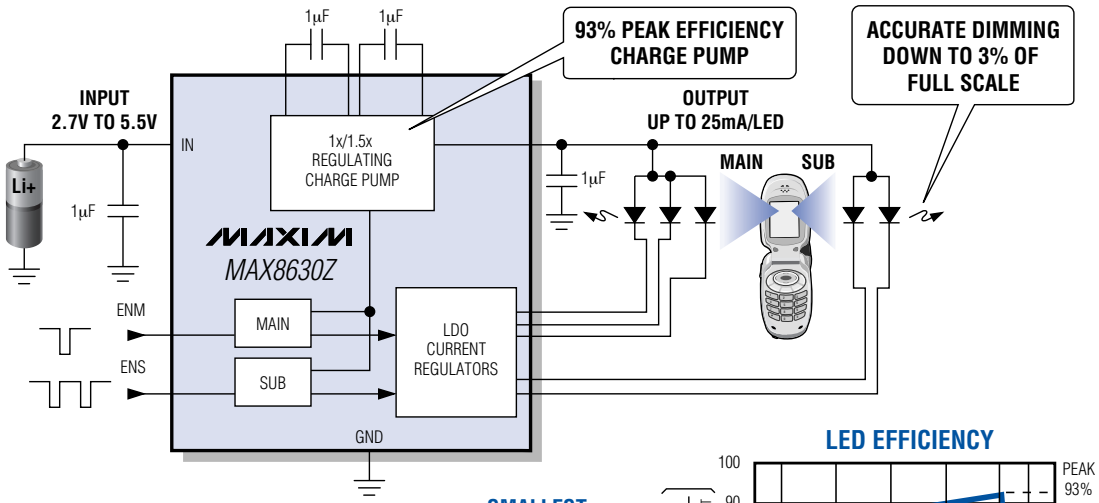

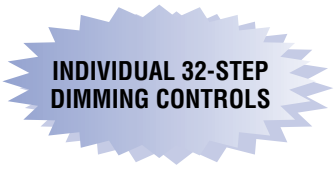

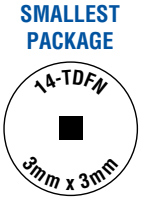

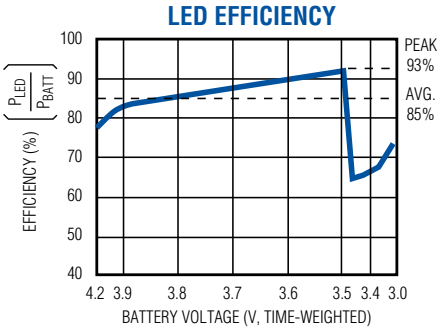

- **Industry's Highest Efficiency**
- **Drives Up to Five LEDs in Two Groups**
- **Factory-Trimmed, Full-Scale LED Current Options of 15mA, 18mA, 20mA, and 25mA**
- **Optional Single, Direct PWM Input to Control All Five LEDs (MAX8630Y)**
- **Input-to-Output Disconnect During Shutdown**
- **1MHz Fixed-Frequency Switching for Small Components**
- **Soft-Start Limits Inrush Current**
- **Output Overvoltage and Thermal Protection**
- **Low Input Ripple and Low EMI**
- **Evaluation Kit Available**
- **Priced at $1.60†**

†2500-up recommended resale. Prices provided are for design guidance and are FOB USA. International prices will differ due to local duties, taxes, and exchange rates. Not all packages are offered in 1k increments, and some may require minimum order quantities.

Fixed-Frequency, CCFL Inverter Controllers Are Easily Synchronized for Best TV/Monitor Picture Quality

The MAX8751 controls a full-bridge and the MAX8729 controls a half-bridge, all-n-channel MOSFET cold-cathode fluorescent lamp (CCFL) inverter. High-power backlight solutions for TV/monitor applications are supported by easy-to-use synchronization and phase-shift features. Synchronization of digital PWM and lamp frequencies ensures the purity of the displayed image. Lowest cost backlight supplies can be used by phase-shifting (maximum of five phases) digital PWM (DPWM) dimming to minimize power-supply load.

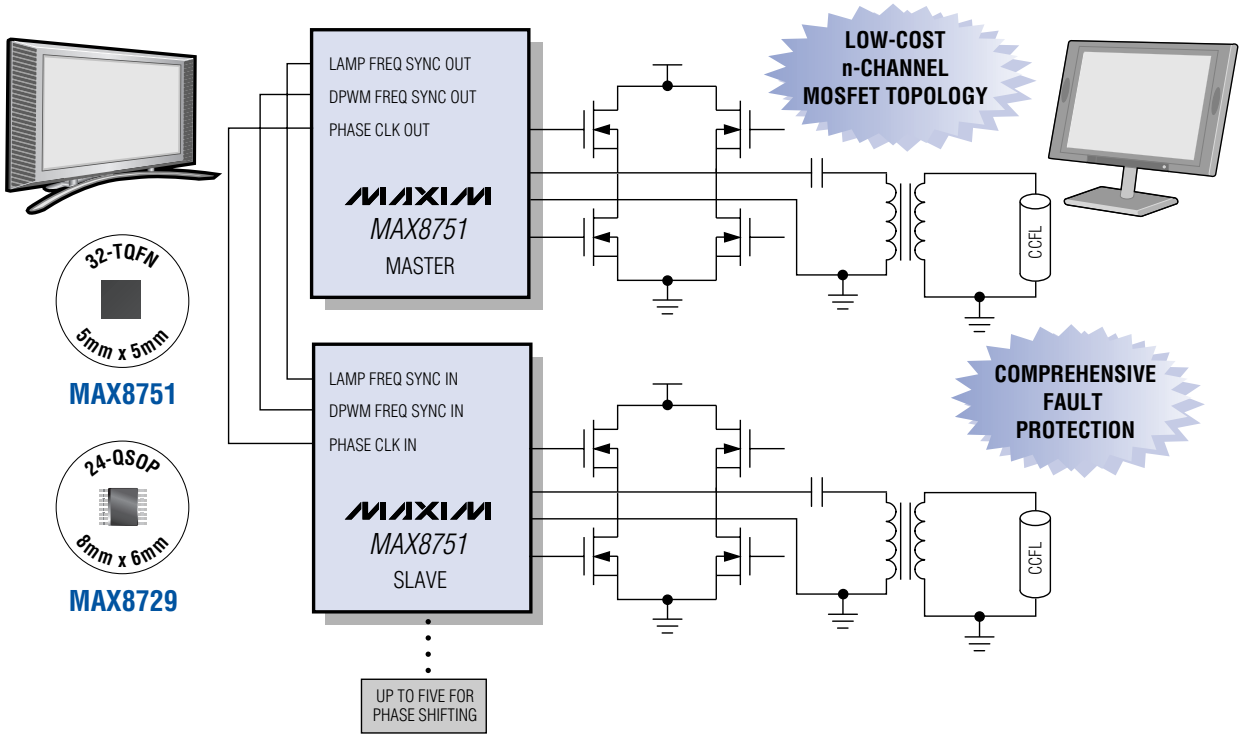

- **Lowest Cost Solution**
  - **All-n-Channel Full-Bridge Controller (MAX8751)**
  - **All-n-Channel Half-Bridge Controller (MAX8729)**
  - **High-Voltage Capability (28V) Eliminates External LDO**
  - **Integrated Boost and Lamp Current-Rectifying Diodes**
- **±2.5% Accurate Lamp-Current Regulation**
- **3.0% Accurate Lamp and DPWM Frequency**
- **Resonant Mode Striking Ensures Startup**
- **Open Lamp Protection with 1s Timer**
- **Secondary Current Limit**
- **10:1 Dimming Range**

High-Efficiency CCFL Backlight Controllers Handle Wide Input-Voltage Range

FUTURE PRODUCT

MAX8759* Supports Ambient-Light Sensing and Intel® DPST

The MAX8759*/MAX8722/MAX8709 integrated backlight controllers are optimized to drive CCFLs using a resonant, full-bridge inverter architecture for maximum power-to-light-output efficiency. These controllers are ideal for battery-powered applications such as notebook computers, and can work over a 4.6V to 28V input-voltage range while achieving > 85% efficiency. The MAX8759/MAX8722/MAX8709 achieve dimming by "chopping" the lamp current on and off. The devices include safety features that protect against lamp-out and short-circuit faults.

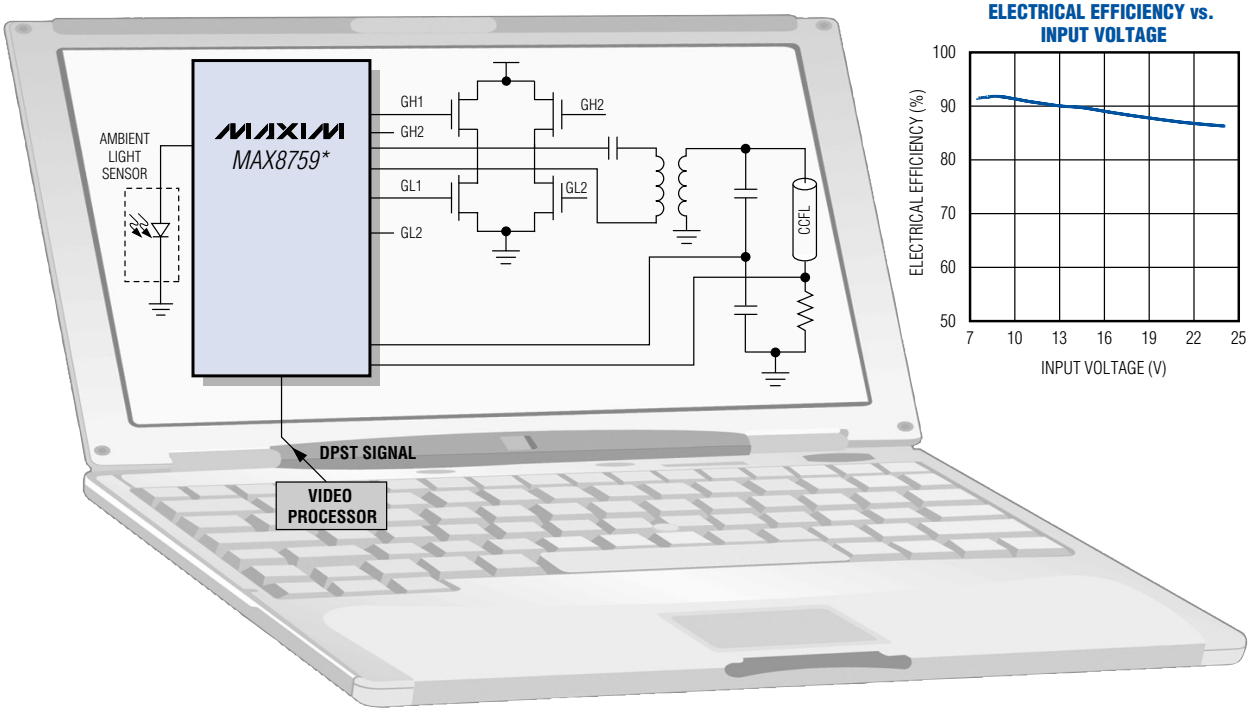

- > 85% Efficiency Maximizes Battery Life
- MAX8759* Includes Special Features to Increase Efficiency
  - Proprietary Control Scheme
  - Ambient-Light Sensing Support
  - Support for Intel DPST (Display Power-Saving Technology)
- Wide 4.6V to 28V Input-Voltage Range
- Analog-Controlled 10:1 Dimming Range (MAX8722)
- DPWM Dimming Control
  - SMBus™-/Analog-Controlled 256:1 Dimming Range (MAX8759)
  - SMBus-Controlled 32:1 Dimming Range (MAX8709)
- Comprehensive Fault Protection
  - Secondary Voltage Limit Reduces Transformer Stress
  - Adjustable Lamp-Out Protection with 1s Timer
  - Secondary Current Limit

*Future product—contact factory for availability.
Intel is a registered trademark and SMBus is a trademark of Intel Corporation.

World's First 4- and 8-Channel CCFL Controllers

Low Component Count Reduces Inverter Cost and Complexity for LCD TVs and Monitors

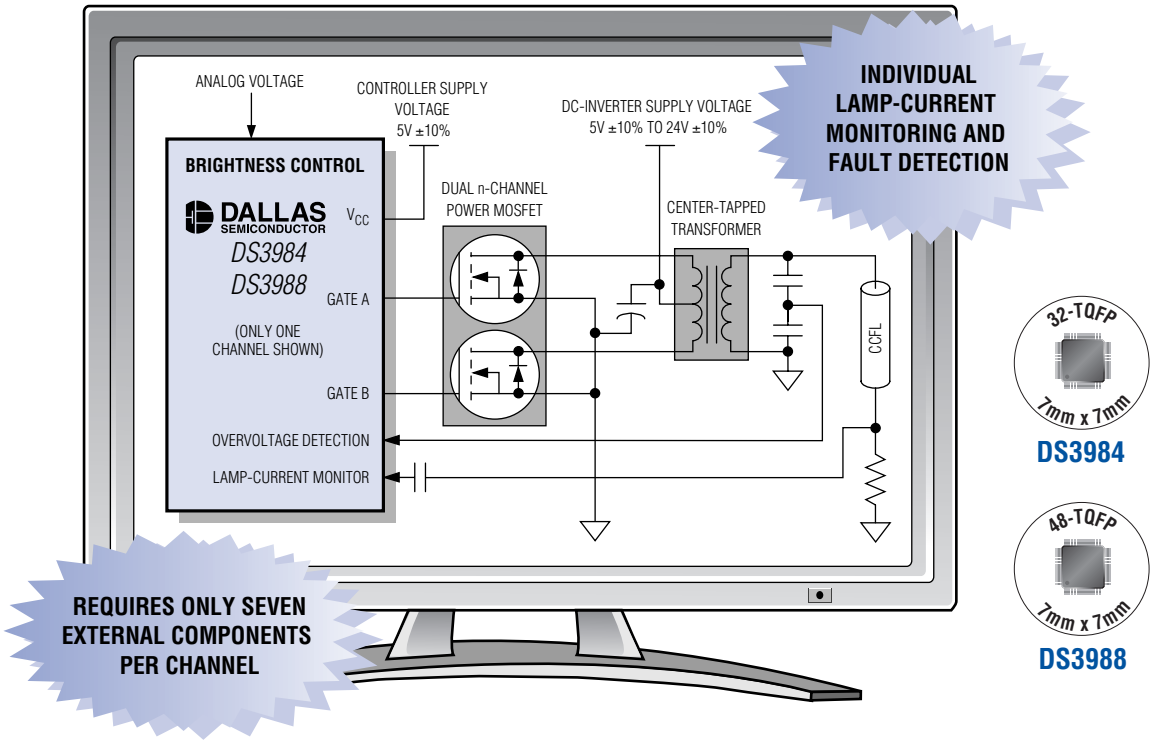

Highly Integrated Solution

- High-Density CCFL Controllers for Multiple-Lamp LCD TV and PC Monitor Backlights
- 4 Channels (DS3984) or 8 Channels (DS3988)
- Easily Cascadable to Support More than Four/Eight Lamps

Improve Quality, Reliability, and Safety

- Individual Lamp Control Ensures Equal Lamp Brightness
- Per-Channel Lamp Fault Monitoring for Open, Short, Failure-to-Strike, and Overvoltage Conditions
- Highly Sinusoidal Inverter Output with Low DC-Offset for Maximized Efficiency and Lamp Life

Highly Programmable and Flexible

- Can Be Synchronized to External Clocks for Lamp and Dimming Frequencies to Reduce Display Artifacts
- Independent On-Board Oscillators with ±5% Accuracy for Lamp (40kHz to 80kHz) and Dimming (22.5Hz to 440Hz) Frequencies
- Programmable Soft-Start Minimizes Audible Transformer Noise
- 2-Wire Serial Port and On-Board EEPROM Allow Device Customization
- 8 Bytes of Nonvolatile User Memory for Storage of Serial Numbers and Date Codes

256-Tap, I²C or SPI, Single or Dual, Nonvolatile Digital Potentiometers

Value, Variety, and Versatility for Contrast Control

Single

SPI

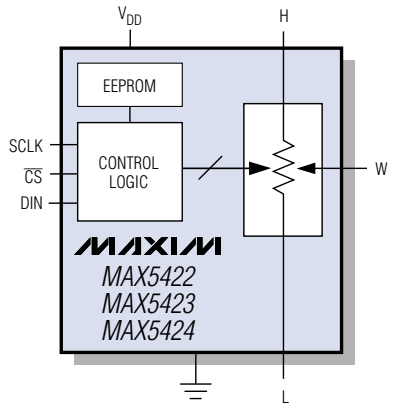

- EEPROM Stores Last Position Prior to Power-Down
- Tiny, 8-Pin, 3mm x 3mm TDFN
- 35ppm/°C End-to-End Tempco and 5ppm/°C Ratiometric Tempco
- Single 2.7V to 5.25V Supply
- 1µA (max) Standby Supply Current

I²C

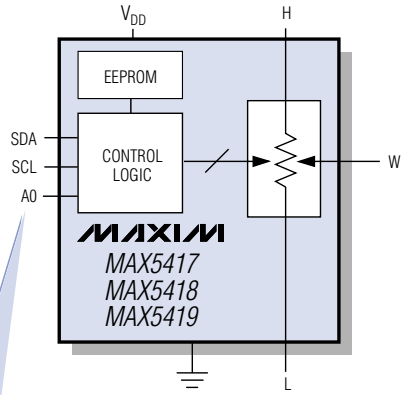

I²C ADDRESSING

Dual

SPI

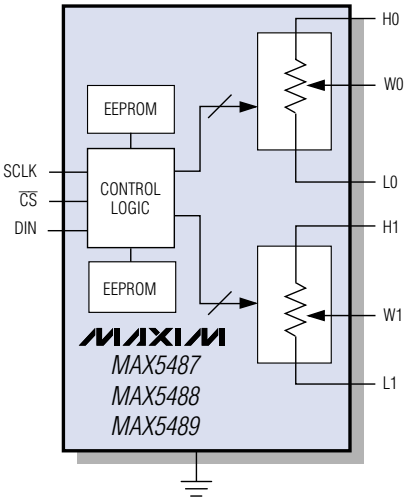

- Dual EEPROM Stores Last Position Prior to Power-Down
- Tiny, 12-Pin, 3mm x 3mm TQFN
- 35ppm/°C End-to-End Tempco and 5ppm/°C Ratiometric Tempco
- Single 2.7V to 5.25V Supply
- 1µA (max) Standby Supply Current

I²C

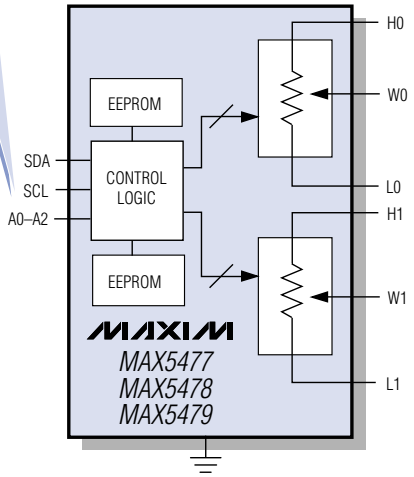

Part	No. of Pots	Interface	End-to-End Resistance (kΩ)	Price† ($)
MAX5417/MAX5418/MAX5419	1	I²C	50/100/200	1.25
MAX5422/MAX5423/MAX5424	1	SPI	50/100/200	1.25
MAX5477/MAX5478/MAX5479	2	I²C	10/50/100	1.60
MAX5487/MAX5488/MAX5489	2	SPI	10/50/100	1.60

†1000-up recommended resale. Prices provided are for design guidance and are FOB USA. International prices will differ due to local duties, taxes, and exchange rates. Not all packages are offered in 1k increments, and some may require minimum order quantities.