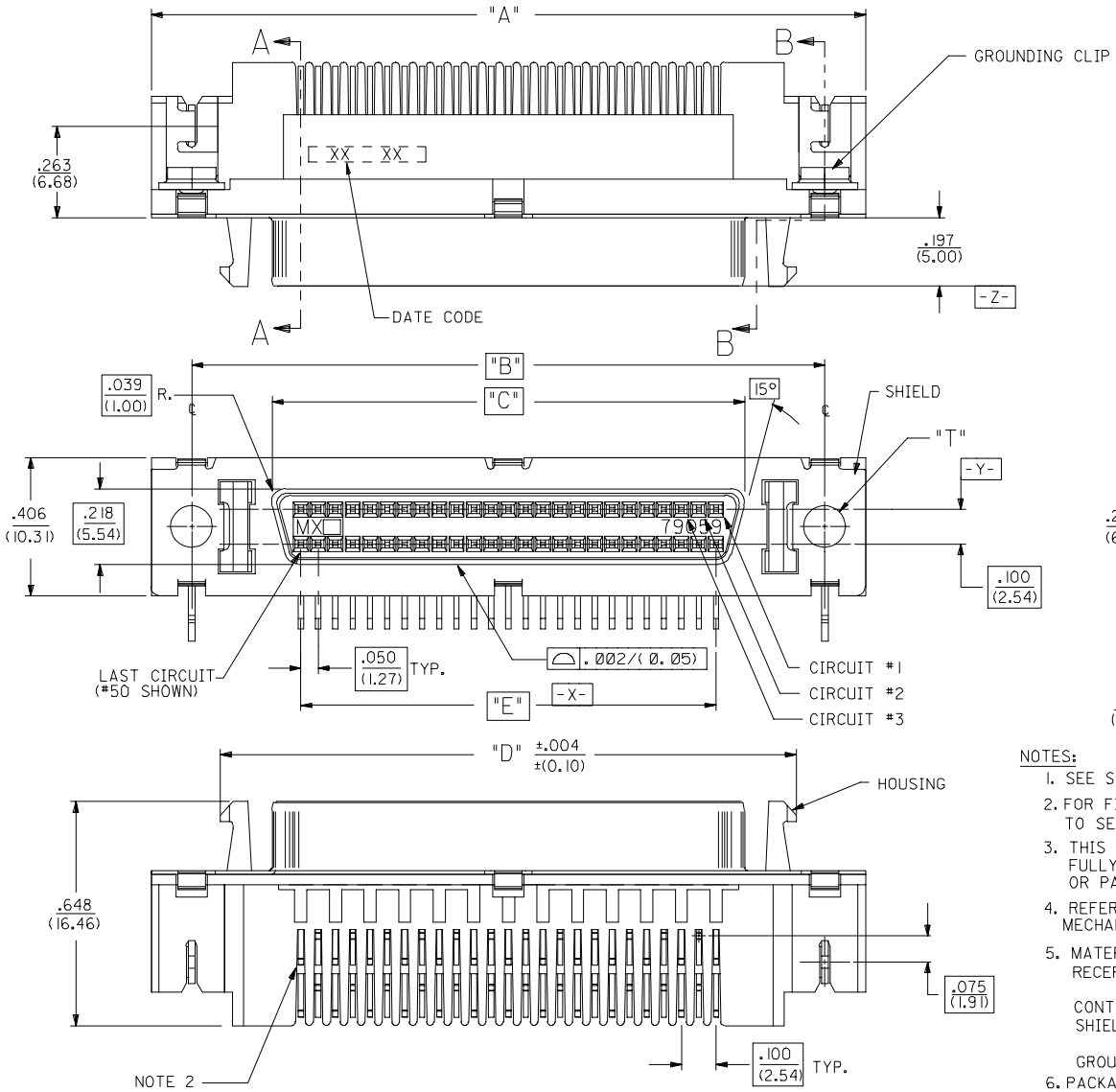

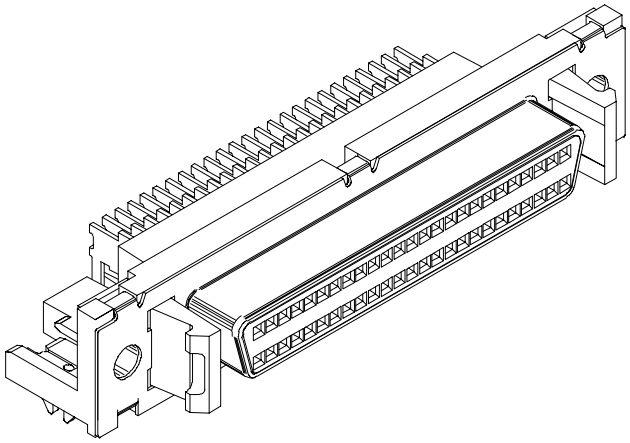

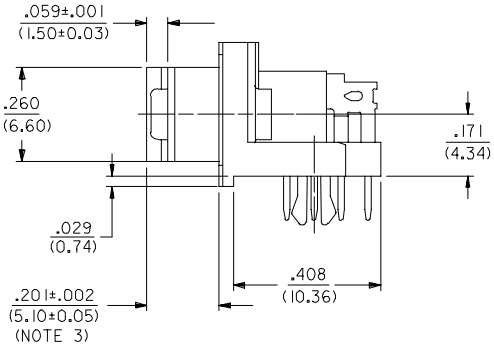

NOTES:

1. SEE SHEET 4 & 5 FOR CHARTED DIMENSIONS AND PART NUMBERS.
2. FOR FIXED TAIL / PCB PATTERN AT LAST CIRCUIT POSITIONS REFER TO SECTION A-A ON SHEET 2 AND PCB LAYOUTS ON SHEET 3.
3. THIS DIMENSION TO MEET SPECIFICATIONS AFTER SHIELD IS FULLY SEATED TO HOUSING AS A RESULT OF A BRACKET OR PANEL.
4. REFER TO PS-79058 PRODUCT SPEC. FOR ELECTRICAL, MECHANICAL AND ENVIROMENTAL SPECIFICATIONS.
5. MATERIAL:
   RECEPTACLE HOUSING: GLASS FILLED LIQUID CRYSTAL POLYMER; COLOR-BLACK; UL 94V-0
   CONTACTS: PHOSPHOR BRONZE
   SHIELD: STEEL WITH BRIGHT NICKEL OVER COPPER FLASH (OPTIONAL)
   GROUNDING CLIP: BRASS WITH TIN OVER NICKEL PLATE
6. PACKAGING:
   PARTS PACKAGED IN TUBES PER PK-70873-0207

SHT.	REV.
5	S
4	S
3	S
2	S
1	S

TERMINAL FINISH:

SELECTIVE GOLD: THICKNESS= 30 MICROINCHES/(0.76 MICROMETERS) MINIMUM.
SELECTIVE TIN: THICKNESS= 75 MICROINCHES/(1.90 MICROMETERS) MINIMUM.
NICKEL UNDERPLATE OVERALL.

NOTE FOR LEAD FREE CONVERSION:

THE PRIMARY SHIPPING CARTON WILL BE LABELED 'COMPLIANT TO RoHS DIRECTIVE 2002/95/EC AND ELV ANNEX II OF DIRECTIVE 2000/53/EC'. CARTONS WITHOUT THIS LABEL MAY CONTAIN PRODUCT WITH LEAD.

UPDATE REV LEVEL
EC NO: UCP2005-1072
DRWN:BSMART 2005/03/11
CH'KD:BBARKER 2005/03/14
APPR:SMILLER 2005/03/28
S

REV | DESCRIPTION

QUALITY SYMBOLS
▼=0
C=0

GENERAL TOLERANCES (UNLESS SPECIFIED)

	mm	INCH
4 PLACES	± ---	± ---
3 PLACES	± ---	± .005
2 PLACES	± 0.13	± ---
1 PLACE	± ---	± ---

ANGULAR ±1/2°

DRAFT WHERE APPLICABLE MUST REMAIN WITHIN DIMENSIONS

DIMENSION STYLE: IN/MM
SCALE: 4:1
DESIGN UNITS: INCH
THIRD ANGLE PROJECTION

DRAWN BY	JLONG	DATE 03/27/1989
CHECKED BY	BOWEN	DATE 03/27/1989
APPROVED BY	DJB	DATE 03/27/1989

TITLE: SCSI SHIELDED RECEPTACLE ASSEMBLY WITH LATCHES

molex MOLEX INCORPORATED

MATERIAL NO.: SEE TABLE
DOCUMENT NO.: SDA-79059-2***
SHEET NO.: 1 OF 5
SIZE: C

THIS DRAWING CONTAINS INFORMATION THAT IS PROPRIETARY TO MOLEX INCORPORATED AND SHOULD NOT BE USED WITHOUT WRITTEN PERMISSION

tb_frame_C_P_ME_T
Rev. D 2004/04/02

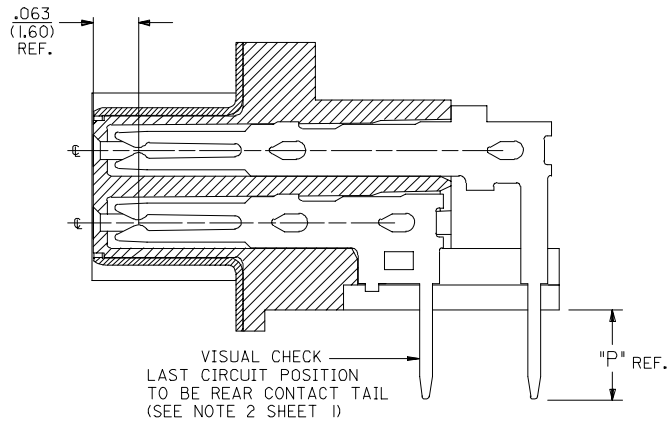

SECTION A-A

68 CIRCUIT TYPE II TAIL VERSION
50 CIRCUIT

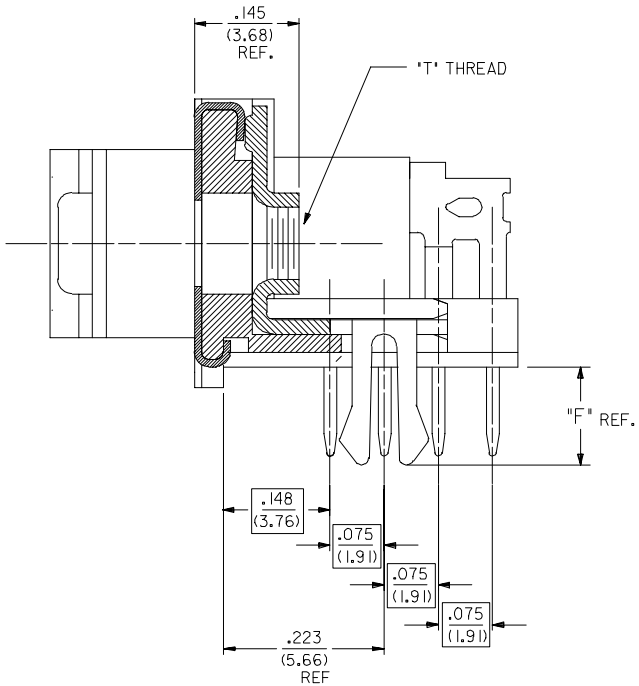

SECTION B-B

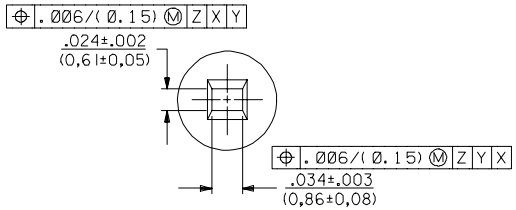

PIN WINDOW DETAIL

SCALE 10:1

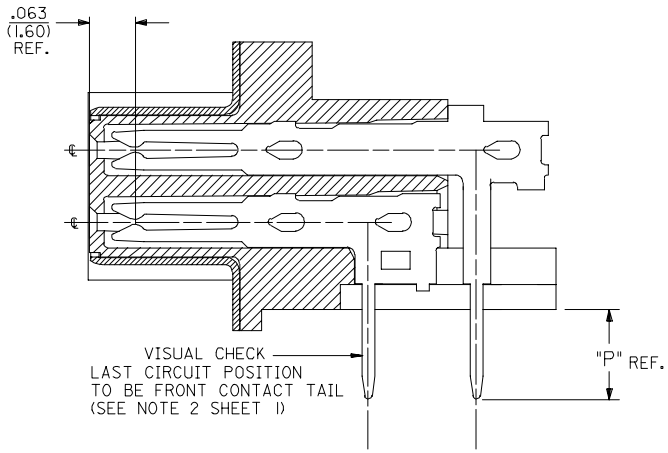

SECTION A-A

68 CIRCUIT TYPE I TAIL VERSION ONLY

CHG TYPE I & II DESC
EC NO: UCP2005-1072
DRWN:BSMART 2005/03/11
CH'KD:BBARKER 2005/03/14
APPR:SMILLER 2005/03/28
S

REV | DESCRIPTION

QUALITY SYMBOLS
▼=0
C=0

GENERAL TOLERANCES (UNLESS SPECIFIED)

	mm	INCH
4 PLACES	± ---	± ---
3 PLACES	± ---	± .005
2 PLACES	± 0.13	± ---
1 PLACE	± ---	± ---

ANGULAR ±1/2°

DRAFT WHERE APPLICABLE MUST REMAIN WITHIN DIMENSIONS

DIMENSION STYLE: IN/MM
SCALE: 8:1
DESIGN UNITS: INCH
THIRD ANGLE PROJECTION

DRAWN BY: JLONG DATE: 04/14/1989
CHECKED BY: BOWEN DATE: 04/14/1989
APPROVED BY: DJB DATE: 04/14/1989

TITLE: SALES ASSEMBLY SCSI SHIELDED RECEPTACLE WITH LATCHES

molex MOLEX INCORPORATED

MATERIAL NO.: SEE TABLE
DOCUMENT NO.: SDA-79059-2***
SHEET NO.: 2
SIZE: C

THIS DRAWING CONTAINS INFORMATION THAT IS PROPRIETARY TO MOLEX INCORPORATED AND SHOULD NOT BE USED WITHOUT WRITTEN PERMISSION

tb_frame_C_P_ME_T
Rev. D 2004/04/02

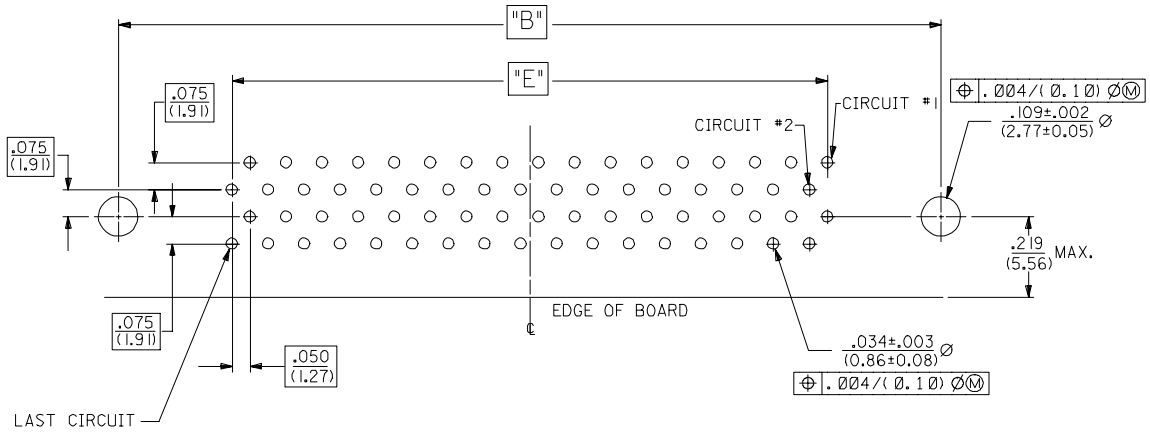

TYPE 168 CKT P.C.BOARD LAYOUT

CONNECTOR SIDE (SCALE 4:1)

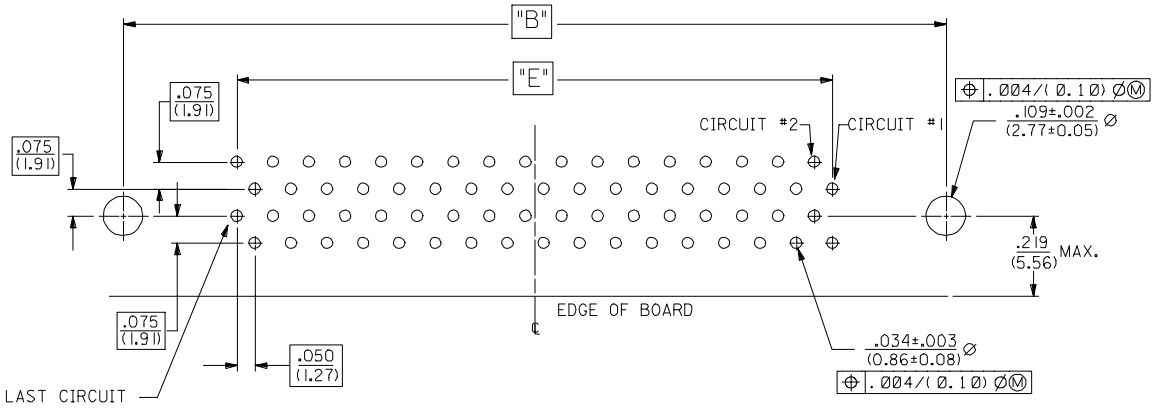

TYPE 1168 CKT P.C.BOARD LAYOUT

CONNECTOR SIDE (SCALE 4:1)

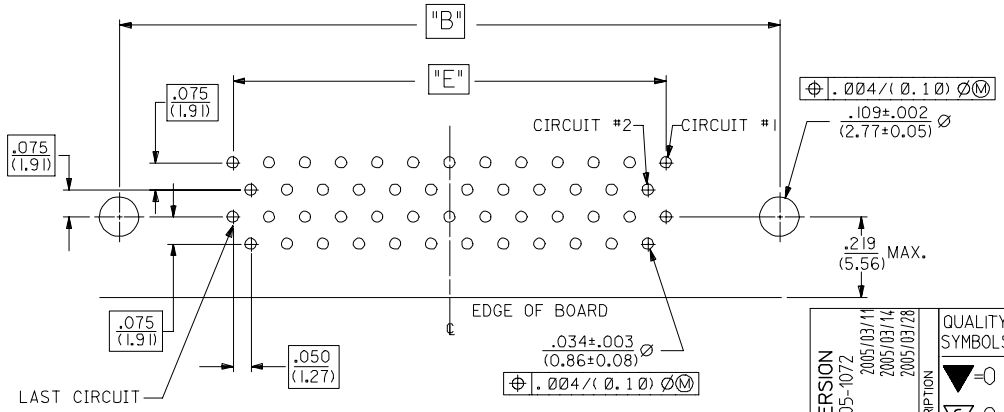

TYPE 150 CKT P.C.BOARD LAYOUT

CONNECTOR SIDE (SCALE 4:1)

ME10 CONVERSION		
EC NO: UCP2005-1072		
DRWN:BSMART	2005/03/11	
CHKD:BBARKER	2005/03/14	
APPR:SMILLER	2005/03/28	
REV	DESCRIPTION	

QUALITY SYMBOLS: ▼=0 ; Ⓒ=0

GENERAL TOLERANCES (UNLESS SPECIFIED)

	mm	INCH
4 PLACES	± ---	± ---
3 PLACES	± ---	± .005
2 PLACES	± 0.13	± ---
1 PLACE	± ---	± ---
ANGULAR ±1/2°		

DRAFT WHERE APPLICABLE MUST REMAIN WITHIN DIMENSIONS

DIMENSION STYLE: IN/MM	SCALE: 8:1	DESIGN UNITS: INCH	THIRD ANGLE PROJECTION
DRAWN BY: JLONG	DATE: 08/14/1989	TITLE: SALES ASSEMBLY SCSI SHIELDED RECEPTACLE WITH LATCHES	
CHECKED BY: BOWEN	DATE: 08/14/1989		
APPROVED BY: DJB	DATE: 08/14/1989	molex MOLEX INCORPORATED	
MATERIAL NO.: SEE TABLE	DOCUMENT NO.: SDA-79059-2***		SHEET NO.: 3

SIZE: C

THIS DRAWING CONTAINS INFORMATION THAT IS PROPRIETARY TO MOLEX INCORPORATED AND SHOULD NOT BE USED WITHOUT WRITTEN PERMISSION

TYPE II TAIL PATTERN

ASSEMBLIES WITH .078 DIAMETER END HOLES IN HOUSING AND #2-56 GND CLIPS

EDP/ITEM NUMBER	CKT. SIZE		HOUSING HOLE DIA.	DIM. T GND CLIP THREAD	DIM. A INCH	DIM. A MM	DIM. B INCH	DIM. B MM	DIM. C INCH	DIM. C MM	DIM. D INCH	DIM. D MM	DIM. E INCH	DIM. E MM	DIM. F INCH	DIM. F MM	DIM. P INCH	DIM. P MM	RECMD PCB INCH	RECMD PCB MM
015-87-6023	68		.078	2-56	2.515	63.88	2.280	57.91	1.816	46.13	2.115	53.72	1.650	41.91	.105	2.67	.125	3.18	.062	1.57
015-87-6024	68		.078	2-56	2.515	63.88	2.280	57.91	1.816	46.13	2.115	53.72	1.650	41.91	.136	3.45	.125	3.18	.093	2.36

ASSEMBLIES WITH .105 DIAMETER END HOLES IN HOUSING AND #4-40 AND CUSTOM GND CLIPS

015-87-6020	68		.105	4-40	2.515	63.88	2.280	57.91	1.816	46.13	2.115	53.72	1.650	41.91	.105	2.67	.125	3.18	.062	1.57
015-87-6021	68		.105	4-40	2.515	63.88	2.280	57.91	1.816	46.13	2.115	53.72	1.650	41.91	.136	3.45	.125	3.18	.093	2.36

TYPE I TAIL PATTERN

ASSEMBLIES WITH .078 DIAMETER END HOLES IN HOUSING AND #2-56 GND CLIPS

EDP/ITEM NUMBER	CKT. SIZE		HOUSING HOLE DIA.	DIM. T GND CLIP THREAD	DIM. A INCH	DIM. A MM	DIM. B INCH	DIM. B MM	DIM. C INCH	DIM. C MM	DIM. D INCH	DIM. D MM	DIM. E INCH	DIM. E MM	DIM. F INCH	DIM. F MM	DIM. P INCH	DIM. P MM	RECMD PCB INCH	RECMD PCB MM
79059-2900	68		.078	2-56	2.515	63.88	2.280	57.91	1.816	46.13	2.115	53.72	1.650	41.91	.105	2.67	.125	3.18	.062	1.57
015-87-6011	50		.078	2-56	2.065	52.54	1.830	46.48	1.366	34.69	1.665	42.29	1.200	30.48	.136	3.45	.125	3.18	.093	2.36
015-87-6010	50		.078	2-56	2.065	52.54	1.830	46.48	1.366	34.69	1.665	42.29	1.200	30.48	.105	2.67	.125	3.18	.062	1.57

ASSEMBLIES WITH .105 DIAMETER END HOLES IN HOUSING AND #4-40 AND CUSTOM GND CLIPS

015-87-6051	50		.105	4-40	2.065	52.54	1.830	46.48	1.366	34.69	1.665	42.29	1.200	30.48	.136	3.45	.125	3.18	.093	2.36
015-87-6050	50		.105	4-40	2.065	52.54	1.830	46.48	1.366	34.69	1.665	42.29	1.200	30.48	.105	2.67	.125	3.18	.062	1.57

NOTE: ASSEMBLIES LISTED ON THIS SHEET HAVE A SMALLER HOLE DIAMETER FOR INSERTION OF SCREWLOCKS USING A POWER DRIVER.

CHG TYPE I & II DESC
EC NO: UCP2005-1072
DRWN:BSMART 2005/03/11
CHKD:BBARKER 2005/03/14
APPR:SMILLER 2005/03/28
REV DESCRIPTION

QUALITY SYMBOLS
▼=0
(C)=0

GENERAL TOLERANCES (UNLESS SPECIFIED)

	mm	INCH
4 PLACES	± ---	± ---
3 PLACES	± ---	± ---
2 PLACES	± ---	± ---
1 PLACE	± ---	± ---
ANGULAR ±1/2°		

DRAFT WHERE APPLICABLE MUST REMAIN WITHIN DIMENSIONS

DIMENSION STYLE: IN/MM
SCALE: ---
DESIGN UNITS: INCH
THIRD ANGLE PROJECTION

DRAWN BY: DCB DATE: 08/15/1991
CHECKED BY: CAB DATE: 08/15/1991
APPROVED BY: CAB DATE: 08/15/1991

TITLE: SALES ASSEMBLY SCSI SHIELDED RECEPTACLE WITH LATCHES

molex MOLEX INCORPORATED

MATERIAL NO.: SEE TABLE
DOCUMENT NO.: SDA-79059-2***
SHEET NO.: 4
SIZE: C

THIS DRAWING CONTAINS INFORMATION THAT IS PROPRIETARY TO MOLEX INCORPORATED AND SHOULD NOT BE USED WITHOUT WRITTEN PERMISSION

TYPE II TAIL PATTERN

ASSEMBLIES WITH .120 DIAMETER END HOLES IN HOUSING AND #4-40 GND CLIPS

EDP/ITEM NUMBER	CKT. SIZE		HOUSING HOLE DIA.	DIM. T GND CLIP THREAD	DIM. A INCH	DIM. A MM	DIM. B INCH	DIM. B MM	DIM. C INCH	DIM. C MM	DIM. D INCH	DIM. D MM	DIM. E INCH	DIM. E MM	DIM. F INCH	DIM. F MM	DIM. P INCH	DIM. P MM	RECMD PCB INCH	RECMD PCB MM
79059-2702	68		.120	4-40	2.515	63.88	2.280	57.91	1.816	46.13	2.115	53.72	1.650	41.91	.105	2.67	.125	3.18	.062	1.57
79059-2708	68		.120	4-40	2.515	63.88	2.280	57.91	1.816	46.13	2.115	53.72	1.650	41.91	.136	3.45	.125	3.18	.093	2.36

ASSEMBLIES WITH .120 DIAMETER END HOLES IN HOUSING AND #2-56 AND CUSTOM GND CLIPS

79059-2721	68		.120	2-56	2.515	63.88	2.280	57.91	1.816	46.13	2.115	53.72	1.650	41.91	.105	2.67	.125	3.18	.062	1.57
79059-2727	68		.120	2-56	2.515	63.88	2.280	57.91	1.816	46.13	2.115	53.72	1.650	41.91	.136	3.45	.125	3.18	.093	2.36

TYPE I TAIL PATTERN

ASSEMBLIES WITH .120 DIAMETER END HOLES IN HOUSING AND #4-40 GND CLIPS

EDP/ITEM NUMBER	CKT. SIZE		HOUSING HOLE DIA.	DIM. T GND CLIP THREAD	DIM. A INCH	DIM. A MM	DIM. B INCH	DIM. B MM	DIM. C INCH	DIM. C MM	DIM. D INCH	DIM. D MM	DIM. E INCH	DIM. E MM	DIM. F INCH	DIM. F MM	DIM. P INCH	DIM. P MM	RECMD PCB INCH	RECMD PCB MM
79059-2701	50		.120	4-40	2.065	52.54	1.830	46.48	1.366	34.69	1.665	42.29	1.200	30.48	.105	2.67	.125	3.18	.062	1.57
79059-2707	50		.120	4-40	2.065	52.54	1.830	46.48	1.366	34.69	1.665	42.29	1.200	30.48	.136	3.45	.125	3.18	.093	2.36

ASSEMBLIES WITH .120 DIAMETER END HOLES IN HOUSING AND #2-56 AND CUSTOM GND CLIPS

79059-2720	50		.120	2-56	2.065	52.54	1.830	46.48	1.366	34.69	1.665	42.29	1.200	30.48	.105	2.67	.125	3.18	.062	1.57
79059-2726	50		.120	2-56	2.065	52.54	1.830	46.48	1.366	34.69	1.665	42.29	1.200	30.48	.136	3.45	.125	3.18	.093	2.36

NOTE: ASSEMBLIES LISTED ON THIS SHEET HAVE A LARGER HOLE DIAMETER FOR INSERTION OF SCREWLOCKS USING A MANUAL DRIVER.

CHG TYPE I TO II
EC NO: UCP2005-1072 2005/03/11
DRWN:BSMART 2005/03/14
CHKD:BBARKER 2005/03/28
APPR:SMILLER
REV DESCRIPTION

QUALITY SYMBOLS
▼=0
Ⓒ=0

GENERAL TOLERANCES (UNLESS SPECIFIED)

	mm	INCH
4 PLACES	± ---	± ---
3 PLACES	± ---	± ---
2 PLACES	± ---	± ---
1 PLACE	± ---	± ---
ANGULAR ±1/2°		

DRAFT WHERE APPLICABLE MUST REMAIN WITHIN DIMENSIONS

DIMENSION STYLE: IN/MM
SCALE: ---
DESIGN UNITS: INCH
THIRD ANGLE PROJECTION

DRAWN BY: JLONG DATE: 01/28/1997
CHECKED BY: JLONG DATE: 01/28/1997
APPROVED BY: DJB DATE: 01/28/1997

TITLE: SALES ASSEMBLY SCSI SHIELDED RECEPTACLE WITH LATCHES

molex MOLEX INCORPORATED

MATERIAL NO.: SEE TABLE
DOCUMENT NO.: SDA-79059-2***
SHEET NO.: 5
SIZE: C

THIS DRAWING CONTAINS INFORMATION THAT IS PROPRIETARY TO MOLEX INCORPORATED AND SHOULD NOT BE USED WITHOUT WRITTEN PERMISSION