DRAWING MADE IN THIRD ANGLE PROJECTION
THIS DRAWING IS UNPUBLISHED. RELEASED FOR PUBLICATION .19 .
© COPYRIGHT 19 BY AMP INCORPORATED. ALL INTERNATIONAL RIGHTS RESERVED.

LOC	DIST
GP	00

REVISIONS				
ZONE	LTR	DESCRIPTION	DATE	APPD
	T	REVISED PER EC 051C-0291-01	07DEC01	JG

1. 0.76µm[.000030] MIN GOLD FOR A LENGTH OF 0.64[.025] MAX, 0.13[.005] MIN FROM MATING END, 3.81µm [.000150] MIN TIN-LEAD ON OPPOSITE END FOR A LENGTH OF 2.72 [.107] MIN, BOTH OVER 1.27µm [.000050] MIN NICKEL.
2. CONTACTS:PHOSPHOR BRONZE; HOUSING & PIN SPACER:UL 94V-0 RATED, THERMOPLASTIC, BLACK; BRACKET:ZINC; SHELL:CARBON STEEL; BOARDLOCKS:COPPER ALLOY.
3. 5.08µm[.000200] MIN NICKEL OVER 1.27µm[.000050] MIN COPPER.
4. 2.54µm[.000100] MIN NICKEL OVER 5.08µm[.000200] COPPER.
5. 5.08µm[.000200] MIN TIN-LEAD OVER 1.27µm[.000050] MIN NICKEL.

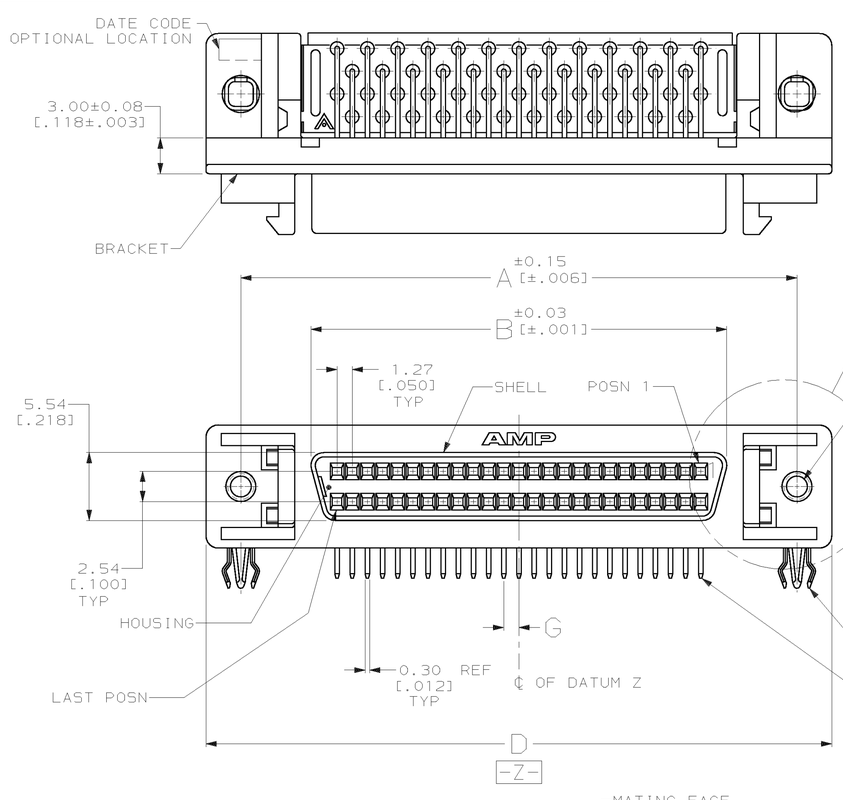

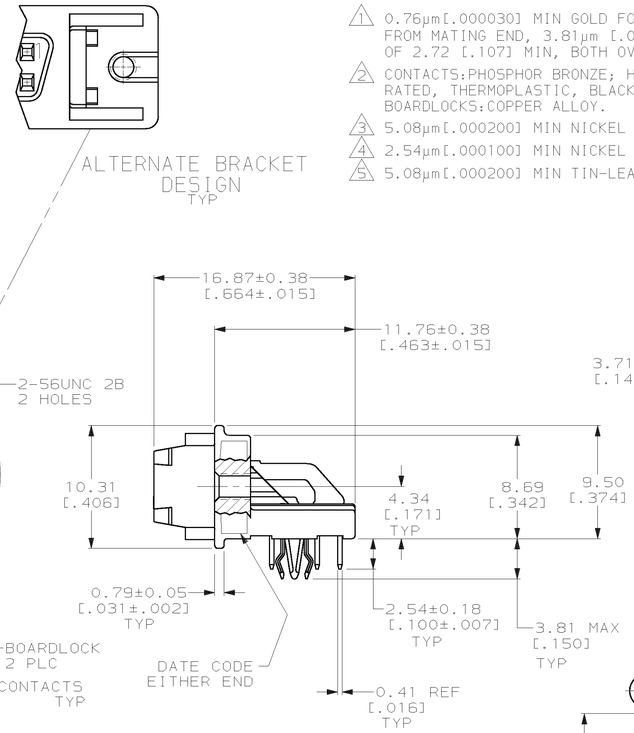

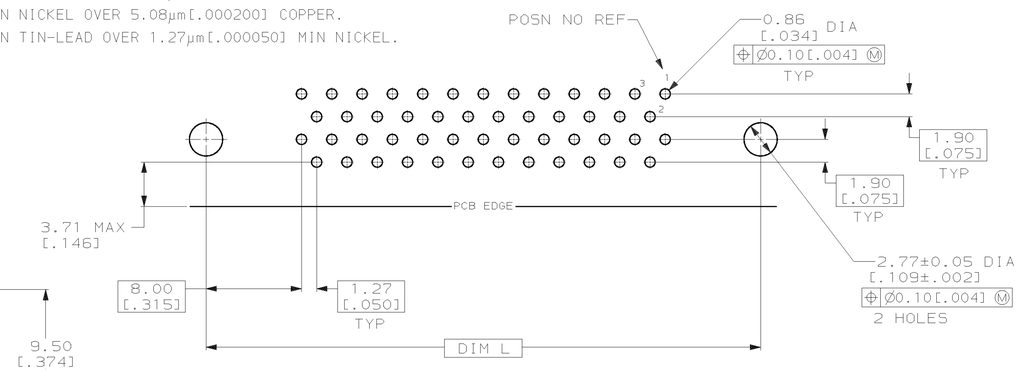

P.C.BOARD MOUNTING DIMENSIONS
CONNECTOR SIDE
P.C.BOARD THICKNESS 1.57±0.20 [.062±.008]
PC BOARD PATTERN S

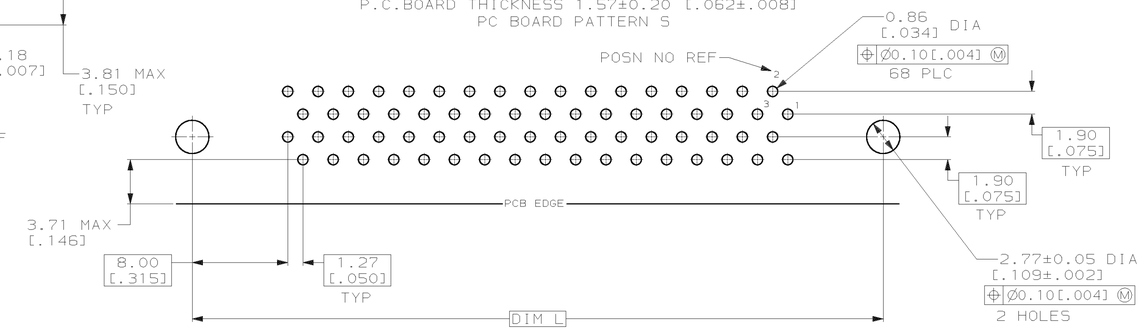

P.C.BOARD MOUNTING DIMENSIONS
CONNECTOR SIDE
P.C.BOARD THICKNESS 1.57±0.20 [.062±.008]
PC BOARD PATTERN T

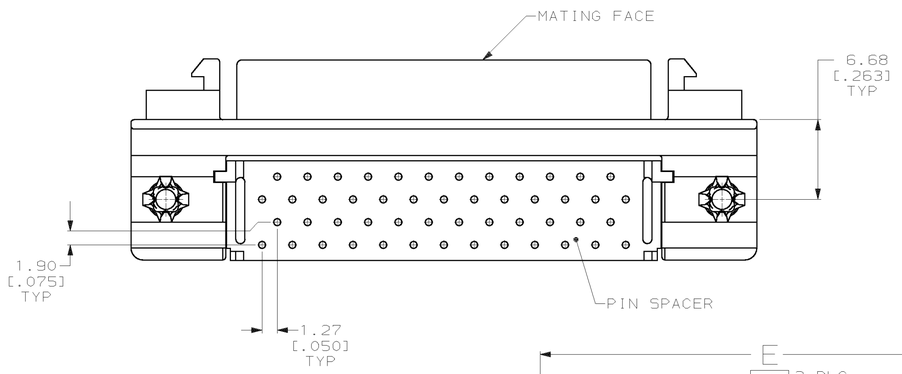

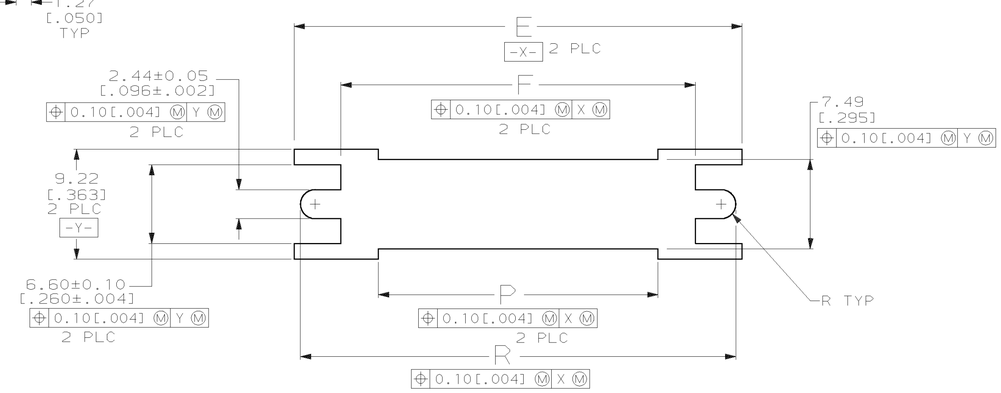

RECOMMENDED PANEL CUTOUT

TRAY	S	48.92 [1.926]	36.42 [1.434]	46.48 [1.834]	1.27 [.050]	42.80 [1.685]	50.55 [1.990]	52.45 [2.065]	34.70 [1.366]	46.48 [1.830]	50	1-787171-5
TUBE	T	80.67 [3.176]	68.17 [2.684]	78.23 [3.080]	0.64 [.025]	74.55 [2.935]	82.30 [3.240]	84.20 [3.315]	66.45 [2.616]	78.23 [3.080]	100	787171-9
TUBE	T	60.35 [2.376]	47.85 [1.884]	57.91 [2.280]	0.64 [.025]	54.23 [2.135]	61.98 [2.440]	63.88 [2.515]	46.13 [1.816]	57.91 [2.280]	68	787171-7
TUBE	S	48.92 [1.926]	36.42 [1.434]	46.48 [1.834]	1.27 [.050]	42.80 [1.685]	50.55 [1.990]	52.45 [2.065]	34.70 [1.366]	46.48 [1.830]	50	787171-5
TUBE	T	42.57 [1.676]	30.07 [1.184]	40.13 [1.580]	0.64 [.025]	36.45 [1.435]	44.20 [1.740]	46.10 [1.815]	28.35 [1.116]	40.13 [1.580]	40	787171-4
TUBE	S	33.68 [1.326]	21.18 [.834]	31.24 [1.230]	1.27 [.050]	27.56 [1.085]	35.31 [1.390]	37.21 [1.465]	19.46 [.766]	31.24 [1.230]	26	787171-2
PACKAGING	PC BOARD PATTERN	R	P	L	G	F	E	D	B	A	NO OF POSN	PART NUMBER

THIS DRAWING IS A CONTROLLED DOCUMENT FOR AMP INCORPORATED. IT IS SUBJECT TO CHANGE AND THE CONTROLLING ENGINEERING ORGANIZATION SHOULD BE CONTACTED FOR THE LATEST REVISION.

DO NOT SCALE PRINT.
UNLESS SPECIFIED
DIMENSIONS IN mm [INCHES]
TOLERANCES ON :
2 PLC DEC ± 0.13 [.005]
3 PLC DEC ± -
ANGLES ± -

MATERIAL 2

FINISH
CONTACTS: 1 BOARDLOCK: 5
SHELL: 3
BRACKET: 4

DR 4-25-94 D.BROCKWAY
CHK 4-28-94 R.STONE
APPD 4-28-94 F.McCORKEL
APPD 4-28-94 F.McCORKEL
PRODUCT SPEC 108-1228
APPLICATION SPEC 114-40029
WEIGHT _

AMP Incorporated
Harrisburg, PA 17105-3608

NAME
RECEPTACLE ASSEMBLY, SHIELDED, RIGHT ANGLE, RAILED, .050 SERIES, AMPLIMITE™

SIZE	CAGE CODE	DRAWING NO
D	00779	C-787171
SCALE 4:1		SHEET 1 OF 1

CUSTOMER DRAWING