- SMD Replacement for H-450, H-400, and H-420 Series LED Assemblies
- Allows Use of 4 SMD LEDs in Small Footprint
- Proprietary Design Eliminates Bleeding
- Works with SM0805 or SM0603 Series LEDs
- Side-Stackable with a Horizontal Pitch of .175"
- Applications: Network Routing and Metering

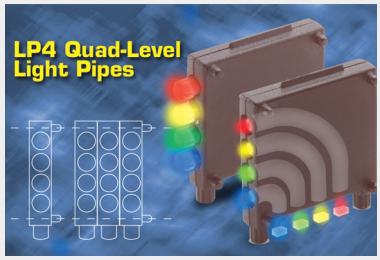

LP4-EP

Quad-Level Extended Lens

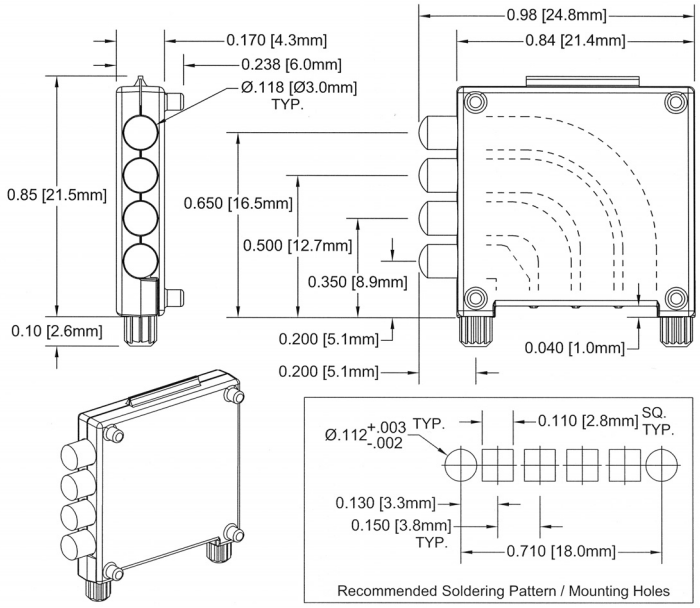

LP4-LP

Quad-Level Recessed Lens

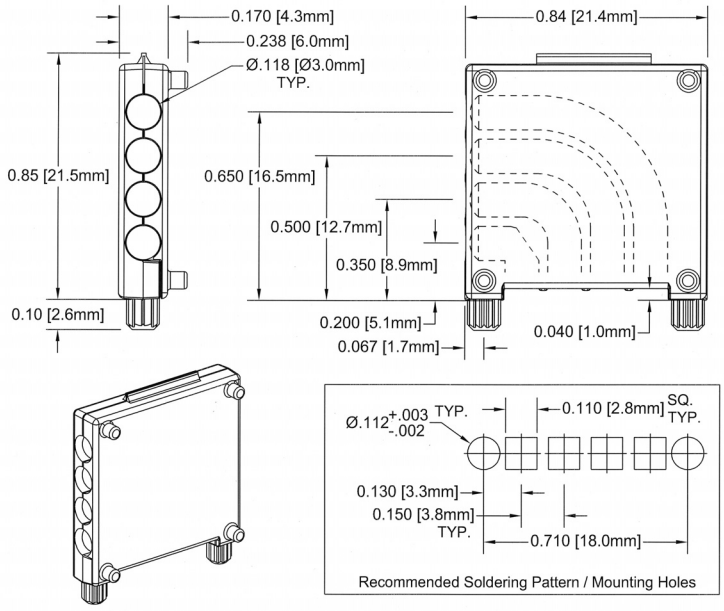

cage code (FSCM) **32559** © copyright 2004 Bivar Inc.