Evaluation Spartan-II Board

Avnet Design Service s

www.em.avnet.co m

Function	Sheet Number
Lead Sheet	1
FPGA, SPROM	2
Power	3
Mictor and Header Connectors	4
Switch, LED, OSC	5
Daughter Board Connector	6

REV	SHEET	DESCRIPTION	DATE
A	ALL	Initial Release	10/02/2000

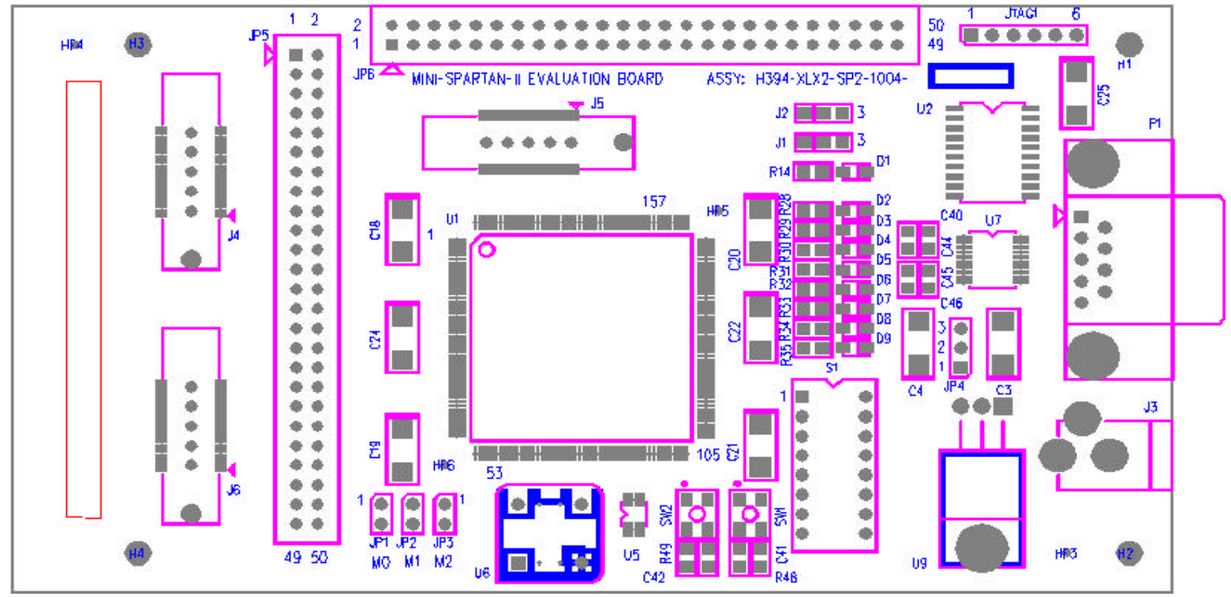

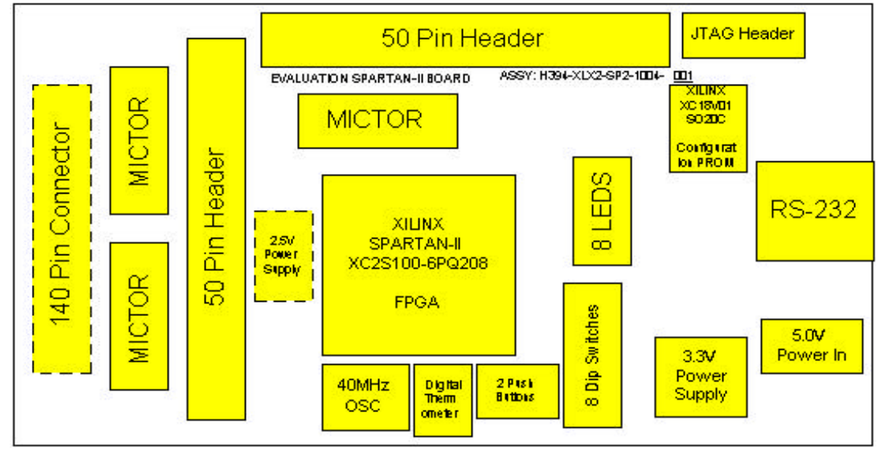

Copyright 2000, Avnet, Inc. All Rights Reserved.

This material may not be reproduced, distributed, republished, displayed, posted, transmitted or copied in any form or by any means without the prior written permission of Avnet, Inc. AVNET and the AV logo are registered trademarks of Avnet, Inc. All trademarks and trade names are the properties of their respective owners and Avnet, Inc. disclaims any proprietary interest or right in trademarks, service marks and trade names other than its own.

Avnet is not responsible for typographical or other errors or omissions or for direct, indirect, incidental or consequential damages related to this material or resulting from its use. Avnet makes no warranty or representation respecting this material, which is provided on an "AS IS" basis. AVNET HEREBY DISCLAIMS ALL WARRANTIES OR LIABILITY OF ANY KIND WITH RESPECT THERETO, INCLUDING, WITHOUT LIMITATION, REPRESENTATIONS REGARDING ACCURACY AND COMPLETENESS, ALL IMPLIED WARRANTIES AND CONDITIONS OF MERCHANTABILITY, SUITABILITY OR FITNESS FOR A PARTICULAR PURPOSE, TITLE AND/OR NON-INFRINGEMENT. This material is not designed, intended or authorized for use in medical, life support, life sustaining or nuclear applications or applications in which the failure of the product could result in personal injury, death or property damage. Any party using or selling products for use in any such applications do so at their sole risk and agree that Avnet is not liable, in whole or in part, for any claim or damage arising from such use, and agree to fully indemnify, defend and hold harmless Avnet from and against any and all claims, damages, loss, cost, expense or liability arising out of or in connection with the use or performance of products in such applications.

AVNET electronics marketing
Design Services

LIT# ADS-000907

Avnet, Inc. *Design Services* Copyright 2000

Title: **Evaluation Spartan-II Board - Lead Sheet**

Size	Document Number	Rev
B	H394-XLX2-SP2-1002	A

Date: Monday, October 09, 2000 Sheet 1 of 6

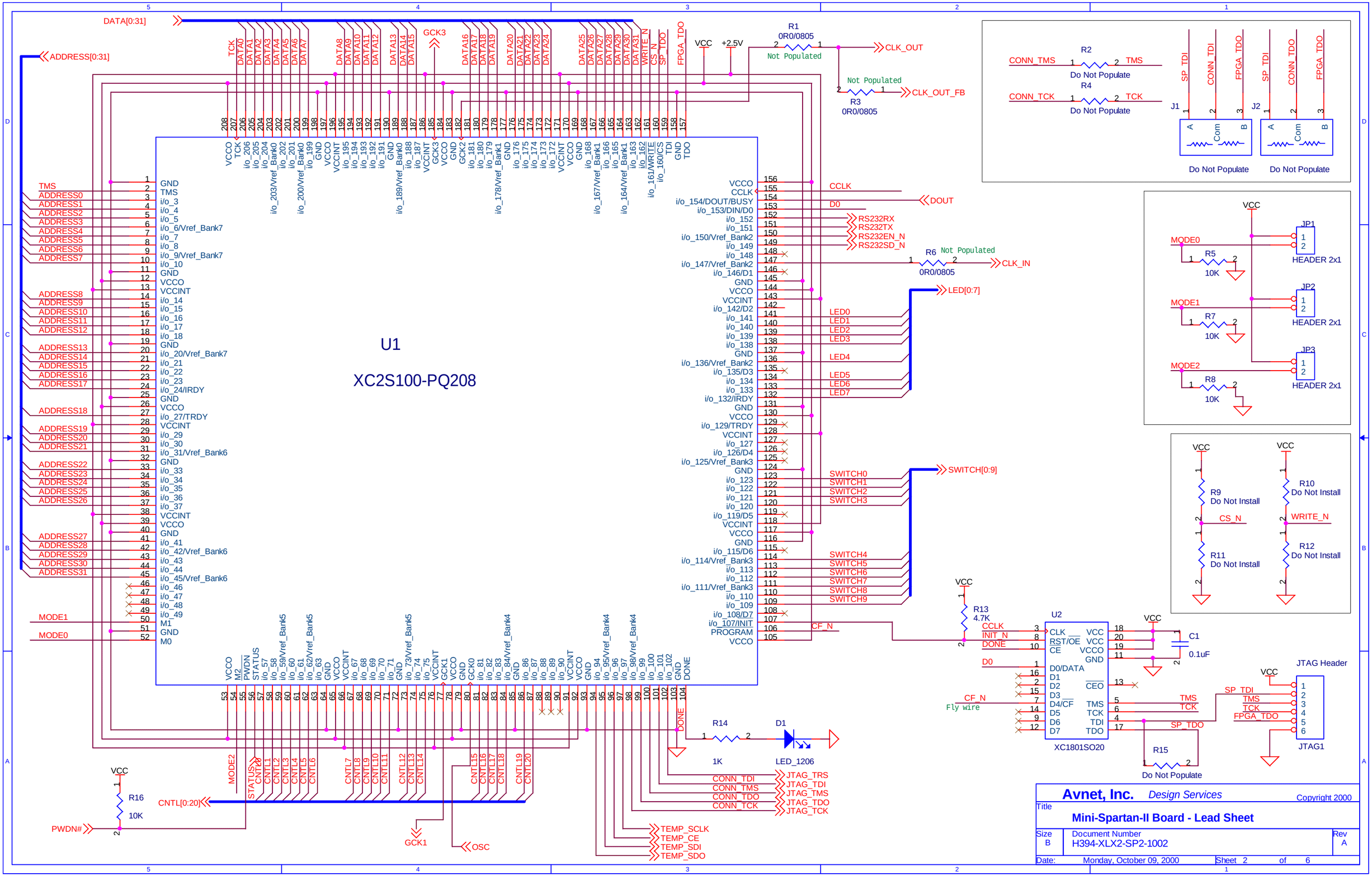
DATA[0:31]
ADDRESS[0:31]
U1
XC2S100-PQ208
R1
0R0/0805
Not Populated
CLK_OUT
R3
0R0/0805
Not Populated
CLK_OUT_FB
R2
Do Not Populate
R4
Do Not Populate
CONN_TMS
CONN_TCK
J1
J2
Do Not Populate
Do Not Populate
R6
0R0/0805
Not Populated
CLK_IN
LED[0:7]
SWITCH[0:9]
DOUT
RS232RX
RS232TX
RS232EN_N
RS232SD_N
JP1
JP2
JP3
HEADER 2x1
MODE0
MODE1
MODE2
R5
R7
R8
10K
R9
Do Not Install
R10
Do Not Install
R11
Do Not Install
R12
Do Not Install
R13
4.7K
U2
XC1801SO20
C1
0.1uF
CF_N
Fly wire
R15
Do Not Populate
JTAG Header
JTAG1
R14
1K
D1
LED_1206
R16
10K
PWDN#
CNTL[0:20]
GCK1
OSC
TEMP_SCLK
TEMP_CE
TEMP_SDI
TEMP_SDO
JTAG_TRS
JTAG_TDI
JTAG_TMS
JTAG_TDO
JTAG_TCK
Avnet, Inc.
Design Services
Copyright 2000
Title
Mini-Spartan-II Board - Lead Sheet
Size
B
Document Number
H394-XLX2-SP2-1002
Rev
A
Date:
Monday, October 09, 2000
Sheet 2 of 6

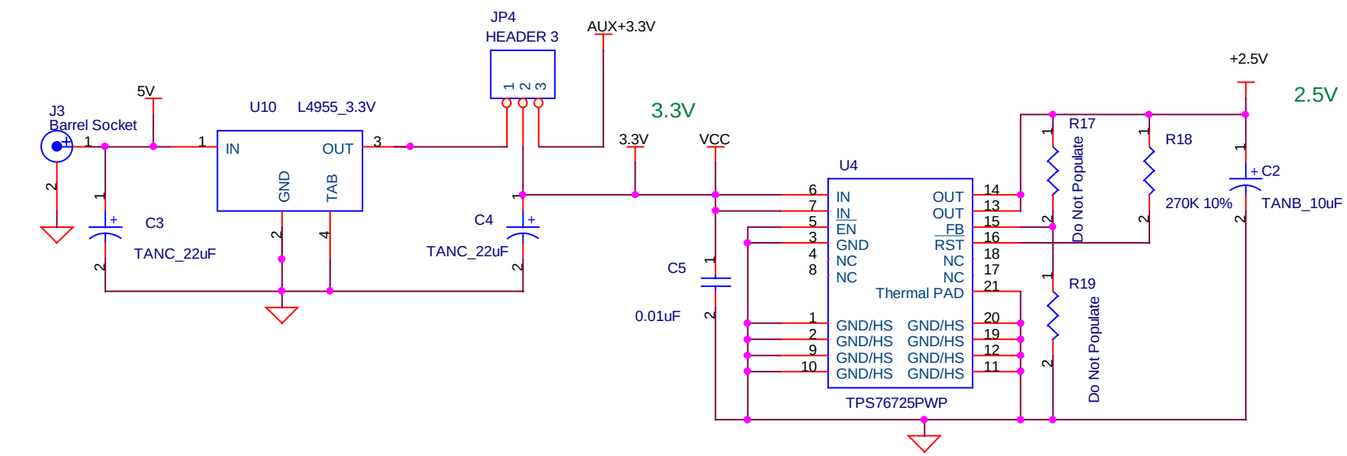

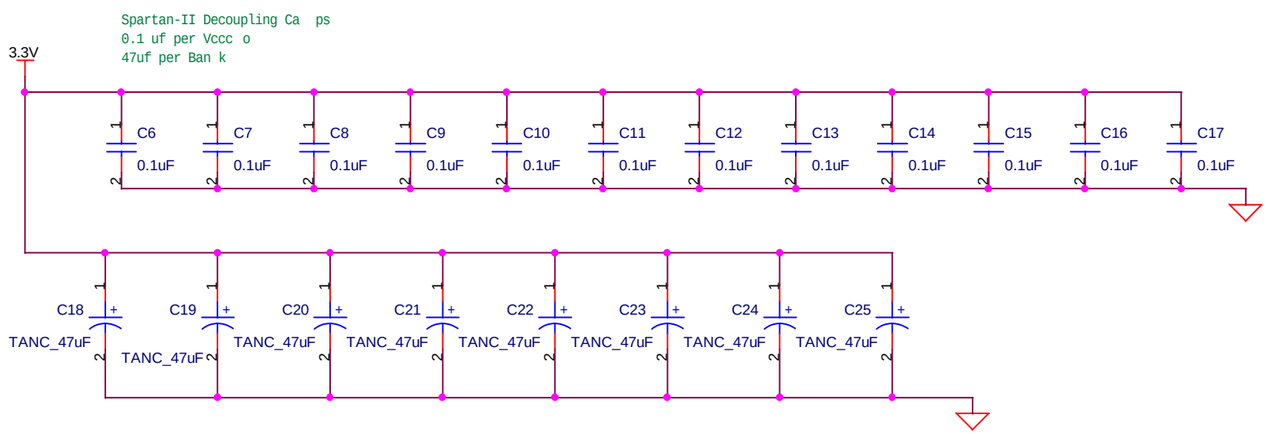

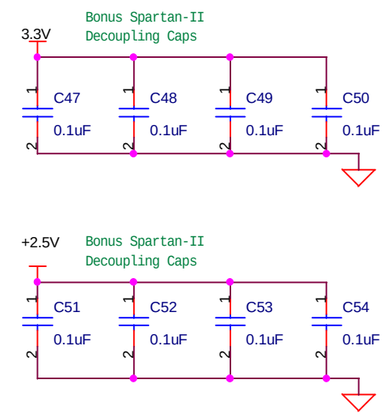

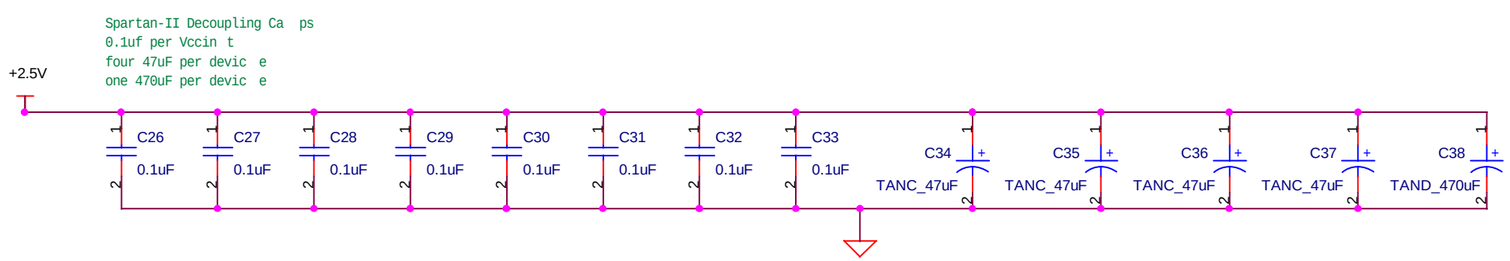

Avnet, Inc. *Design Services* Copyright 2000

Title: **Mini-Spartan-II Board - Power**

Size	Document Number	Rev
B	H394-XLX2-SP2-1002	A

Date: Monday, October 09, 2000 Sheet 3 of 6

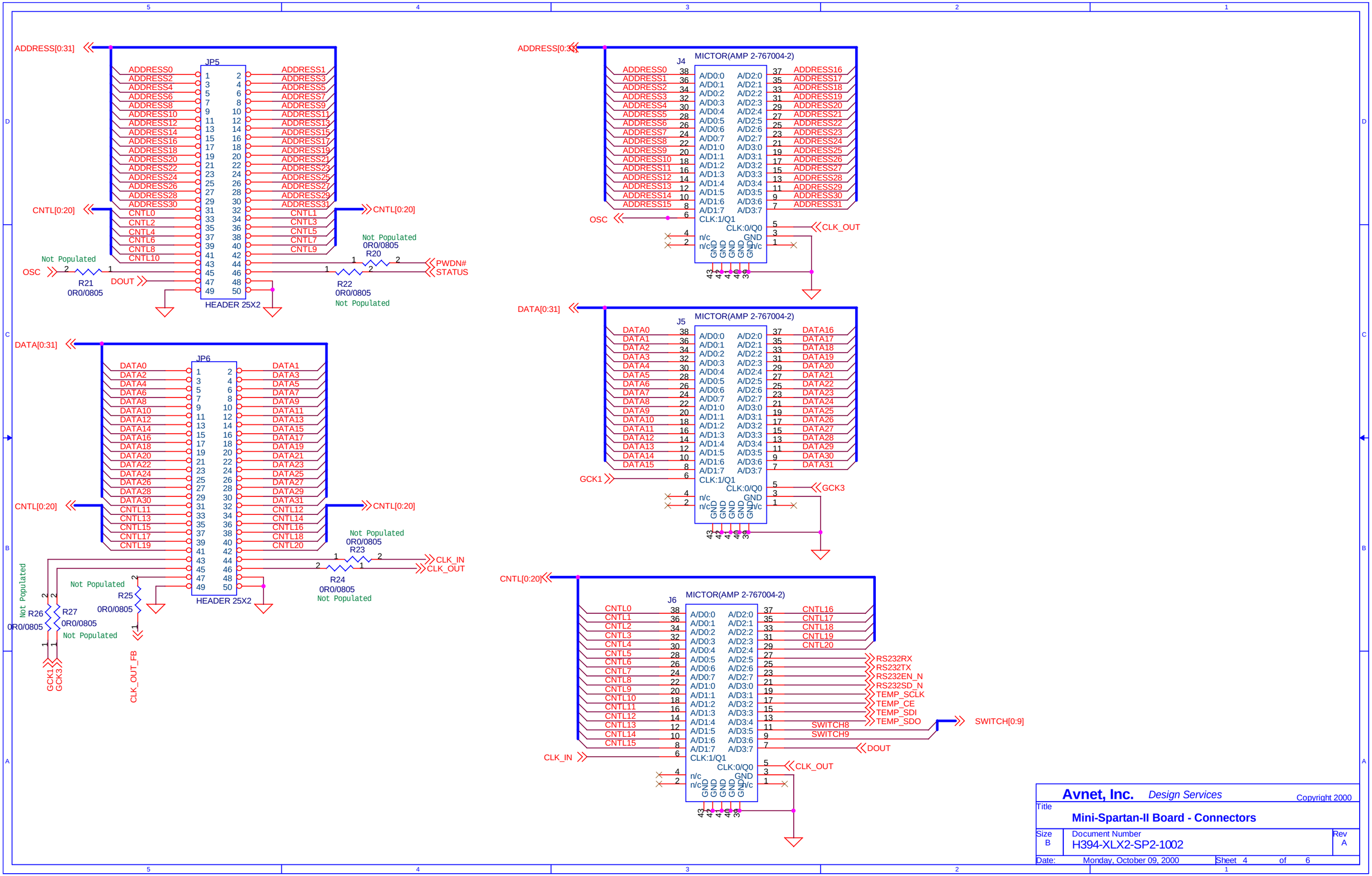

Avnet, Inc. *Design Services* Copyright 2000

Title: **Mini-Spartan-II Board - Connectors**

Size	Document Number	Rev
B	H394-XLX2-SP2-1002	A

Date: Monday, October 09, 2000 Sheet 4 of 6

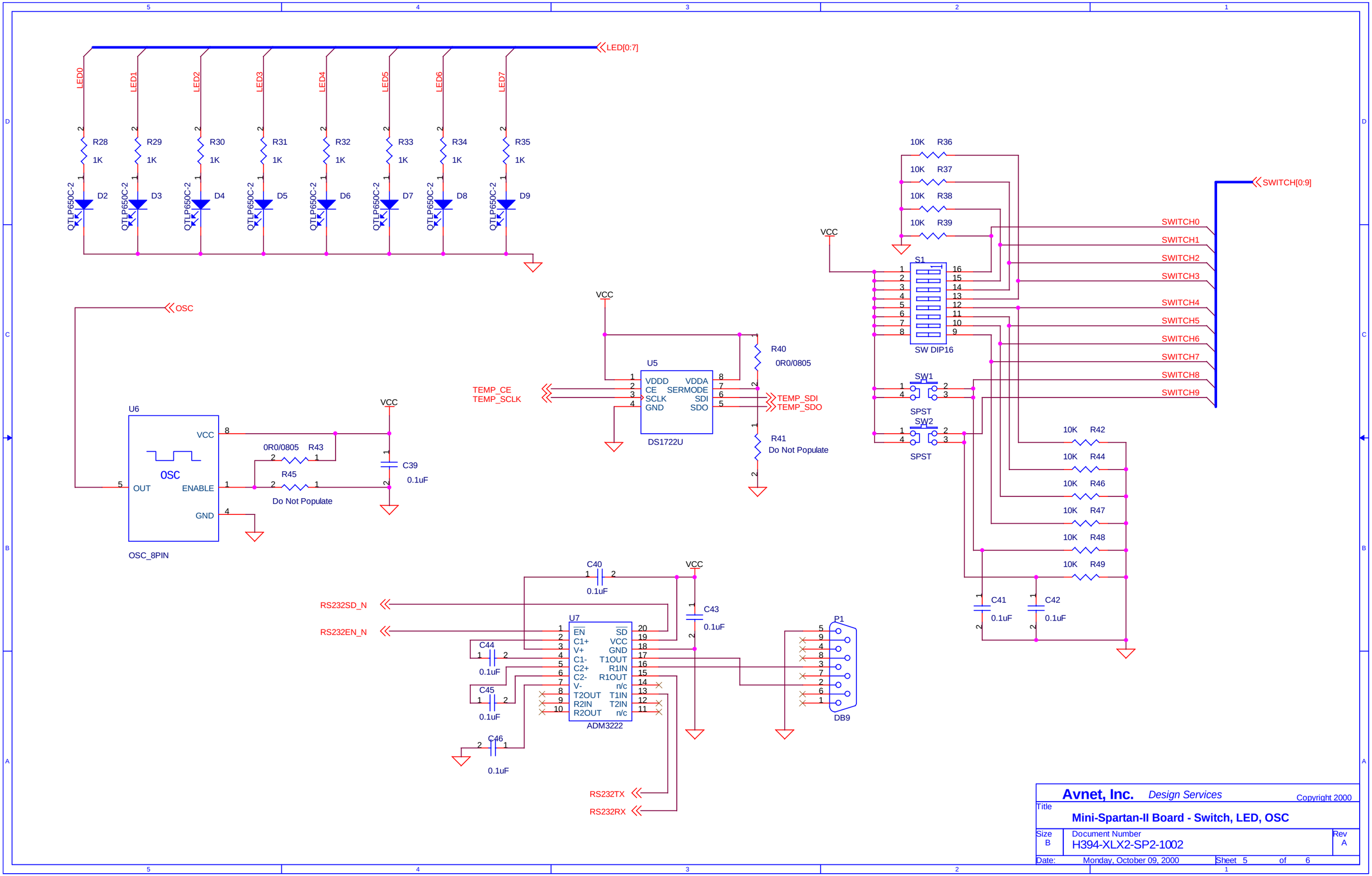
LED[0:7]
LED0
LED1
LED2
LED3
LED4
LED5
LED6
LED7
R28 1K
R29 1K
R30 1K
R31 1K
R32 1K
R33 1K
R34 1K
R35 1K
D2 QTLP650C-2
D3 QTLP650C-2
D4 QTLP650C-2
D5 QTLP650C-2
D6 QTLP650C-2
D7 QTLP650C-2
D8 QTLP650C-2
D9 QTLP650C-2
OSC
U6
OSC
VCC
OUT
ENABLE
GND
OSC_8PIN
0R0/0805 R43
R45
Do Not Populate
C39
0.1uF
VCC
U5
VDDD
VDDA
CE
SERMODE
SCLK
SDI
GND
SDO
DS1722U
TEMP_CE
TEMP_SCLK
TEMP_SDI
TEMP_SDO
R40
0R0/0805
R41
Do Not Populate
10K R36
10K R37
10K R38
10K R39
VCC
S1
SW DIP16
SWITCH[0:9]
SWITCH0
SWITCH1
SWITCH2
SWITCH3
SWITCH4
SWITCH5
SWITCH6
SWITCH7
SWITCH8
SWITCH9
SW1
SPST
SW2
SPST
10K R42
10K R44
10K R46
10K R47
10K R48
10K R49
C41
0.1uF
C42
0.1uF
C40
0.1uF
VCC
C43
0.1uF
RS232SD_N
RS232EN_N
U7
EN
C1+
V+
C1-
C2+
C2-
V-
T2OUT
R2IN
R2OUT
SD
VCC
GND
T1OUT
R1IN
R1OUT
n/c
T1IN
T2IN
n/c
ADM3222
C44
0.1uF
C45
0.1uF
C46
0.1uF
P1
DB9
RS232TX
RS232RX
Avnet, Inc. Design Services
Copyright 2000
Title
Mini-Spartan-II Board - Switch, LED, OSC
Size B
Document Number
H394-XLX2-SP2-1002
Rev A
Date: Monday, October 09, 2000
Sheet 5 of 6

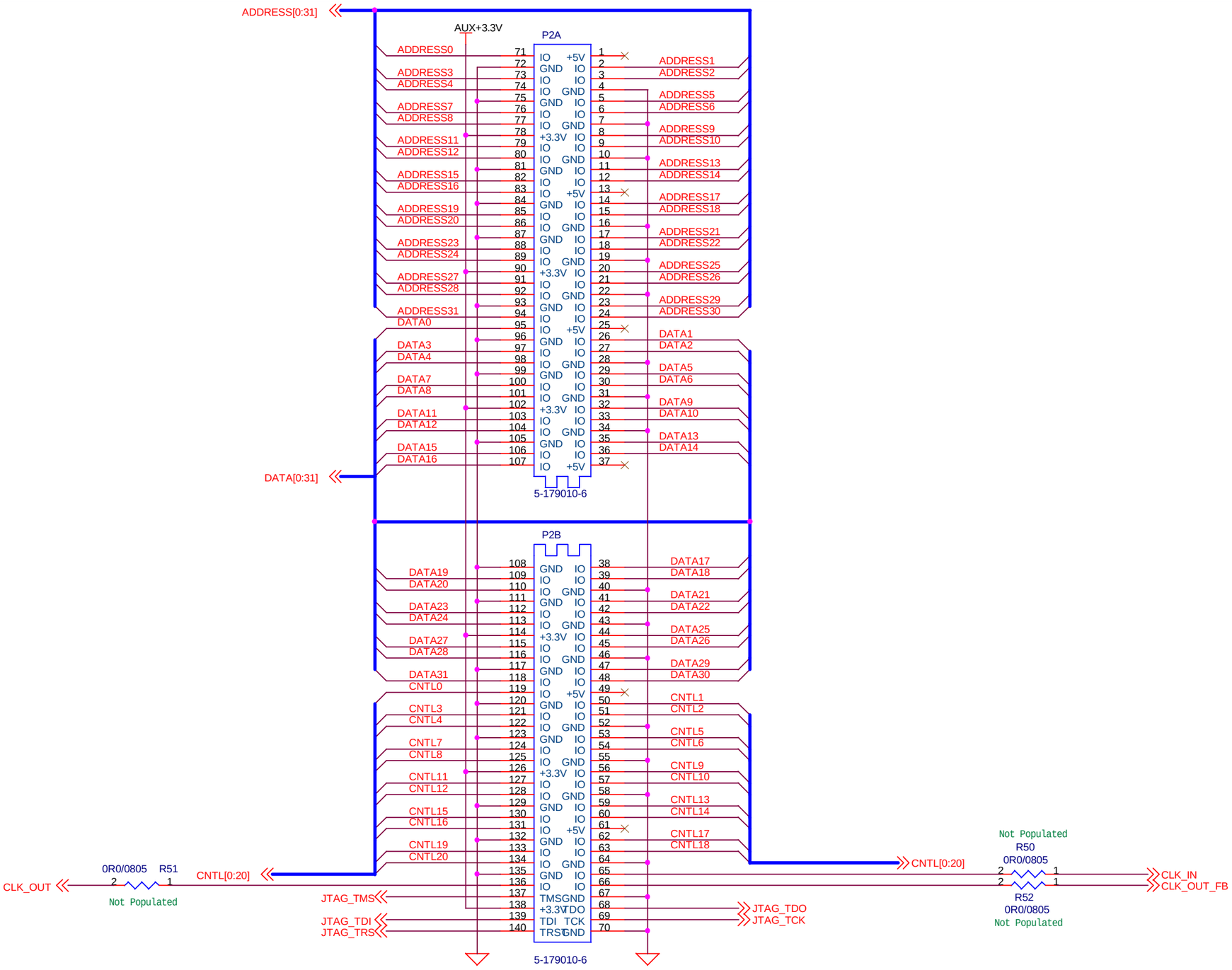

Avnet, Inc. *Design Services* Copyright 2000

Title
Mini-Spartan-II Board - Daughter Board Connector

Size	Document Number	Rev
B	H394-XLX2-SP2-1002	A

Date: Monday, October 09, 2000 Sheet 6 of 6