Timing Generator Fanout 2 Rev 3

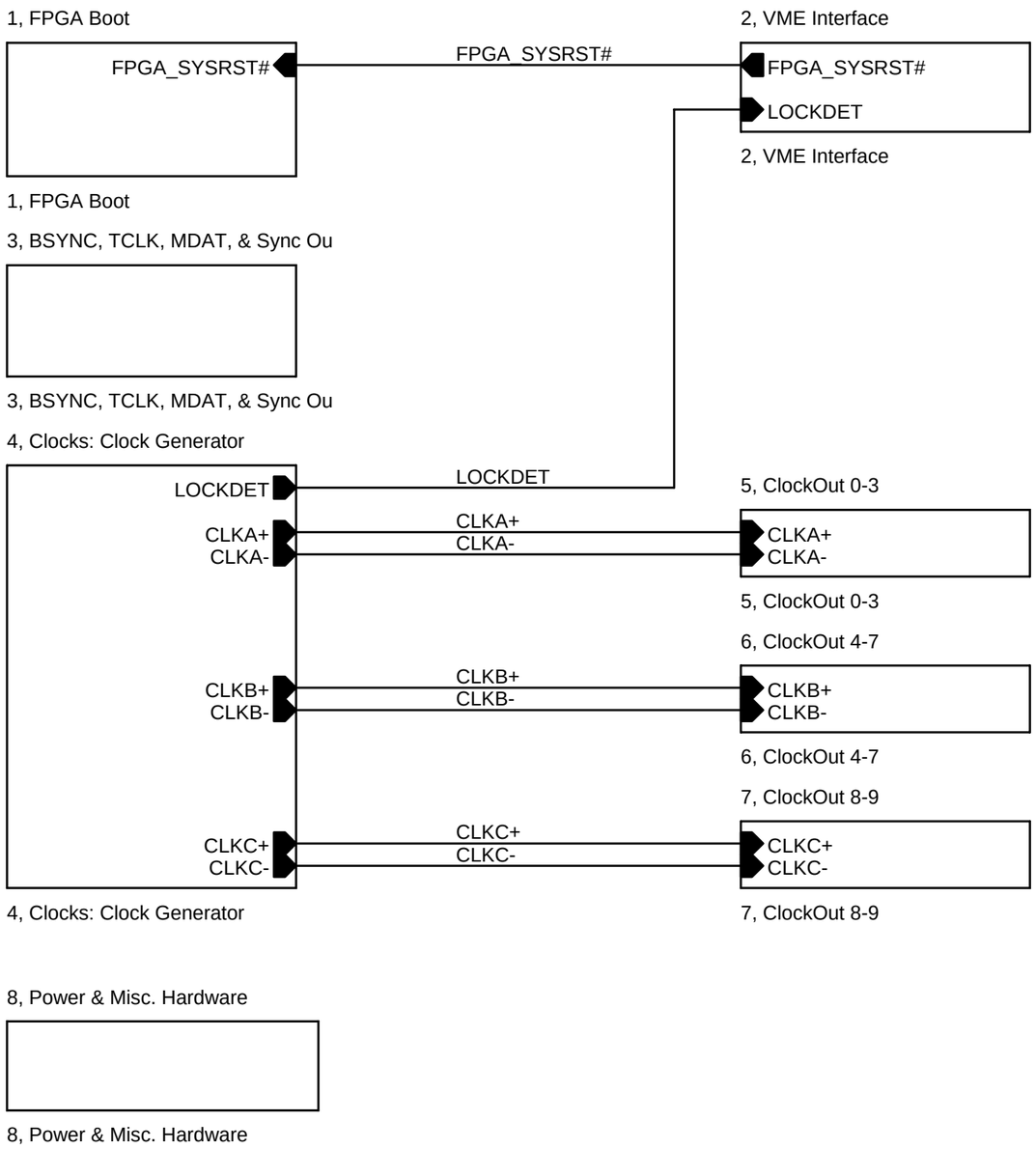

Title	TGF2 Rev 3 Block Diagram	
Size A	Document Number <Doc>	Rev 0.2
Date: Monday, September 19, 2005	Sheet 1 of 10	

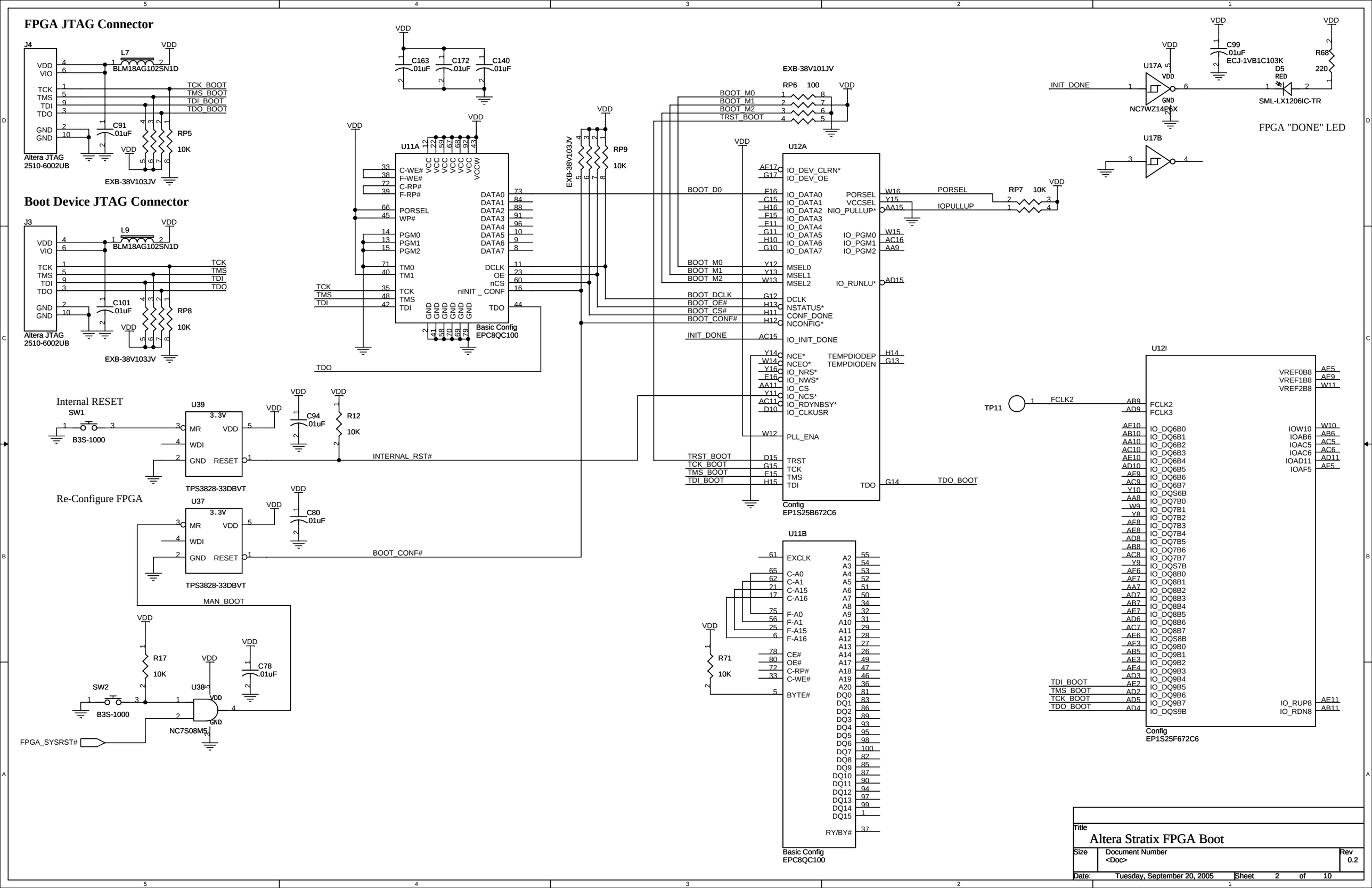
FPGA JTAG Connector
J4
Altera JTAG
2510-6002UB
L7
BLM18AG102SN1D
VDD
VIO
TCK
TMS
TDI
TDO
GND
TCK_BOOT
TMS_BOOT
TDI_BOOT
TDO_BOOT
C91
.01uF
RP5
10K
EXB-38V103JV
Boot Device JTAG Connector
J3
L9
TCK
TMS
TDI
TDO
C101
.01uF
RP8
10K
Internal RESET
SW1
B3S-1000
U39
3.3V
MR
WDI
RESET
TPS3828-33DBVT
C94
.01uF
R12
10K
INTERNAL_RST#
Re-Configure FPGA
U37
C80
.01uF
BOOT_CONF#
MAN_BOOT
R17
10K
SW2
U38
NC7S08M5
C78
.01uF
FPGA_SYSRST#
C163
.01uF
C172
.01uF
C140
.01uF
U11A
C-WE#
F-WE#
C-RP#
F-RP#
PORSEL
WP#
PGM0
PGM1
PGM2
TM0
TM1
DATA0
DATA1
DATA2
DATA3
DATA4
DATA5
DATA6
DATA7
DCLK
OE
nCS
nINIT_CONF
TDO
Basic Config
EPC8QC100
RP9
10K
EXB-38V101JV
RP6
100
BOOT_M0
BOOT_M1
BOOT_M2
TRST_BOOT
U12A
IO_DEV_CLRN*
IO_DEV_OE
IO_DATA0
IO_DATA1
IO_DATA2
IO_DATA3
IO_DATA4
IO_DATA5
IO_DATA6
IO_DATA7
PORSEL
VCCSEL
NIO_PULLUP*
IO_PGM0
IO_PGM1
IO_PGM2
MSEL0
MSEL1
MSEL2
IO_RUNLU*
DCLK
NSTATUS*
CONF_DONE
NCONFIG*
IO_INIT_DONE
NCE*
NCEO*
IO_NRS*
IO_NWS*
IO_CS
IO_NCS*
IO_RDYNBSY*
IO_CLKUSR
TEMPDIODEP
TEMPDIODEN
PLL_ENA
TRST
TCK
TMS
TDI
TDO
Config
EP1S25B672C6
RP7
10K
IOPULLUP
U17A
NC7WZ14P6X
INIT_DONE
C99
.01uF
ECJ-1VB1C103K
D5
RED
SML-LX1206IC-TR
R68
220
FPGA "DONE" LED
U17B
U11B
EXCLK
C-A0
C-A1
C-A15
C-A16
F-A0
F-A1
F-A15
F-A16
CE#
OE#
C-RP#
C-WE#
BYTE#
RY/BY#
R71
10K
U12I
TP11
FCLK2
FCLK3
IO_DQ6B0
IO_DQ6B1
IO_DQ6B2
IO_DQ6B3
IO_DQ6B4
IO_DQ6B5
IO_DQ6B6
IO_DQ6B7
IO_DQS6B
IO_DQ7B0
IO_DQ7B1
IO_DQ7B2
IO_DQ7B3
IO_DQ7B4
IO_DQ7B5
IO_DQ7B6
IO_DQ7B7
IO_DQS7B
IO_DQ8B0
IO_DQ8B1
IO_DQ8B2
IO_DQ8B3
IO_DQ8B4
IO_DQ8B5
IO_DQ8B6
IO_DQ8B7
IO_DQS8B
IO_DQ9B0
IO_DQ9B1
IO_DQ9B2
IO_DQ9B3
IO_DQ9B4
IO_DQ9B5
IO_DQ9B6
IO_DQ9B7
IO_DQS9B
VREF0B8
VREF1B8
VREF2B8
IOW10
IOAB6
IOAC5
IOAC6
IOAD11
IOAF5
IO_RUP8
IO_RDN8
Config
EP1S25F672C6
Title
Altera Stratix FPGA Boot
Size
Document Number
<Doc>
Rev
0.2
Date: Tuesday, September 20, 2005
Sheet 2 of 10

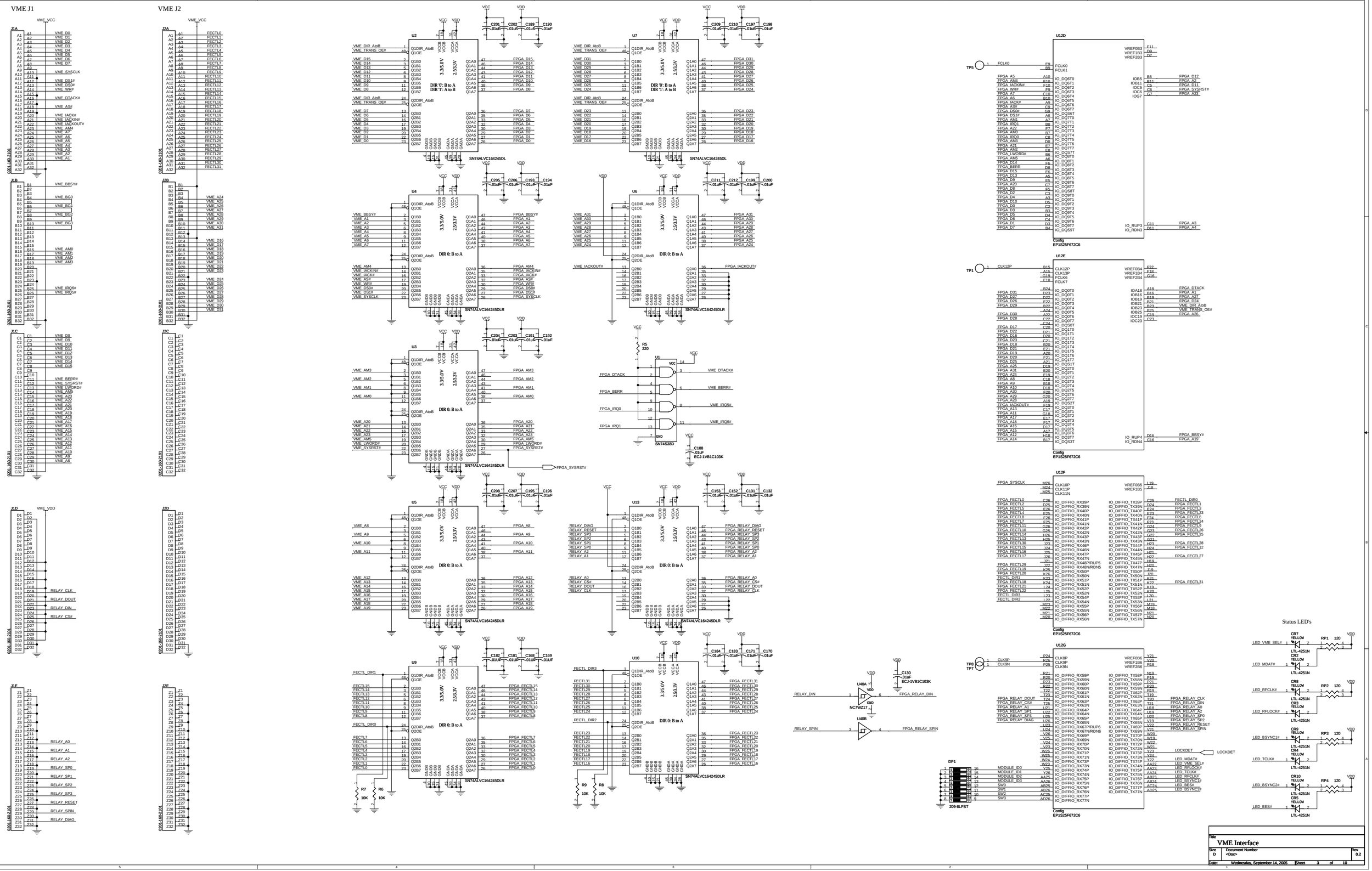
VME J1
VME J2
J1A
J1B
J1C
J1D
J1E
J2A
J2B
J2C
J2D
J2E
VME_VCC
VME_VDD
U2
U7
U4
U6
U3
U5
U13
U9
U10
U12D
U12E
U12F
U12G
U1
U40A
U40B
SN74ALVC164245DL
SN74ALVC164245DLR
SN74S38D
NC7WZ17
DIR '0': B to A
DIR '1': A to B
Status LED's
Title
VME Interface
Size D
Document Number <Doc>
Rev 0.2
Date: Wednesday, September 14, 2005
Sheet 3 of 10

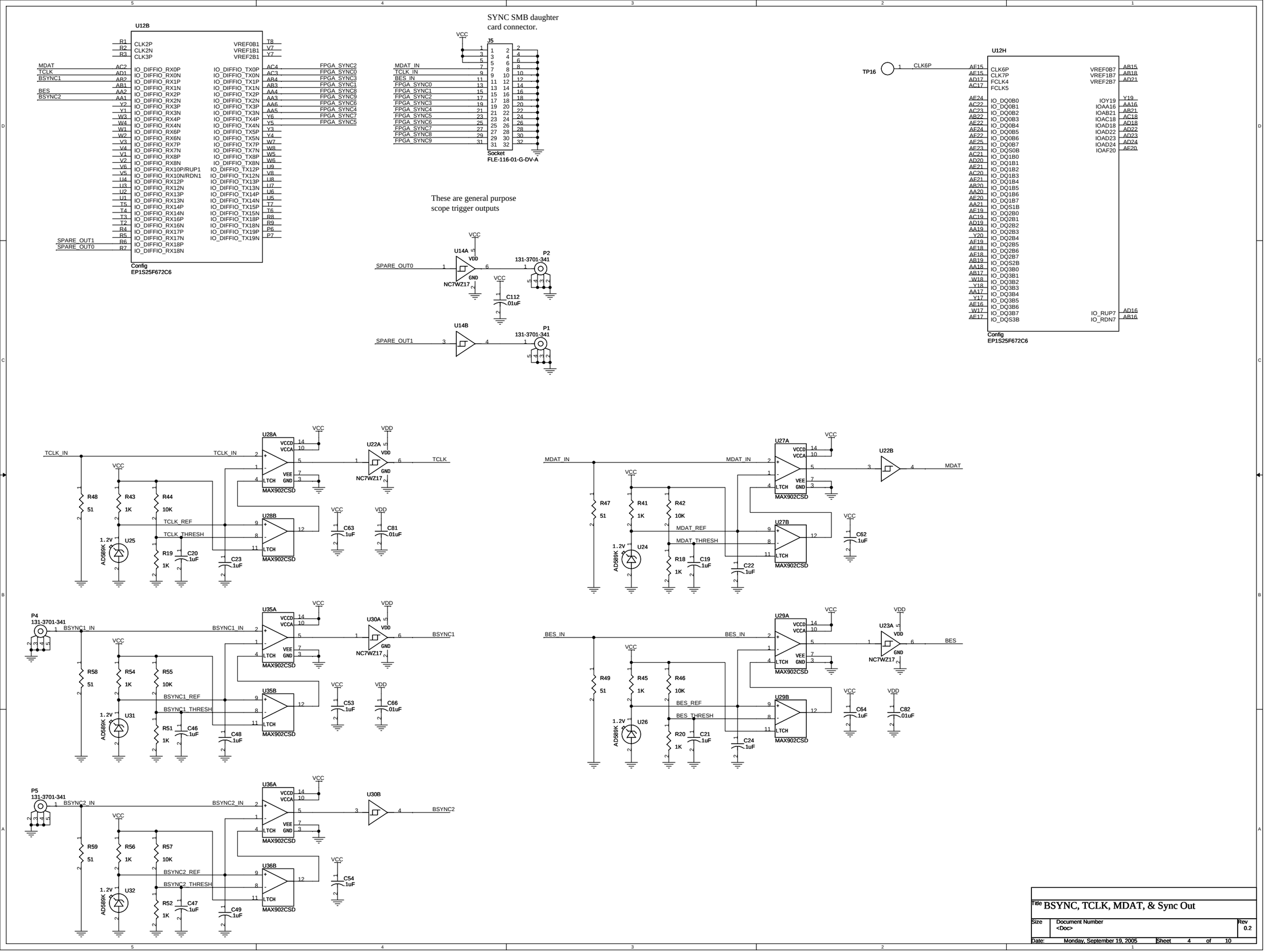

Title	BSYNC, TCLK, MDAT, & Sync Out
Size	Document Number <Doc>
Rev	0.2
Date:	Monday, September 19, 2005
Sheet	4 of 10

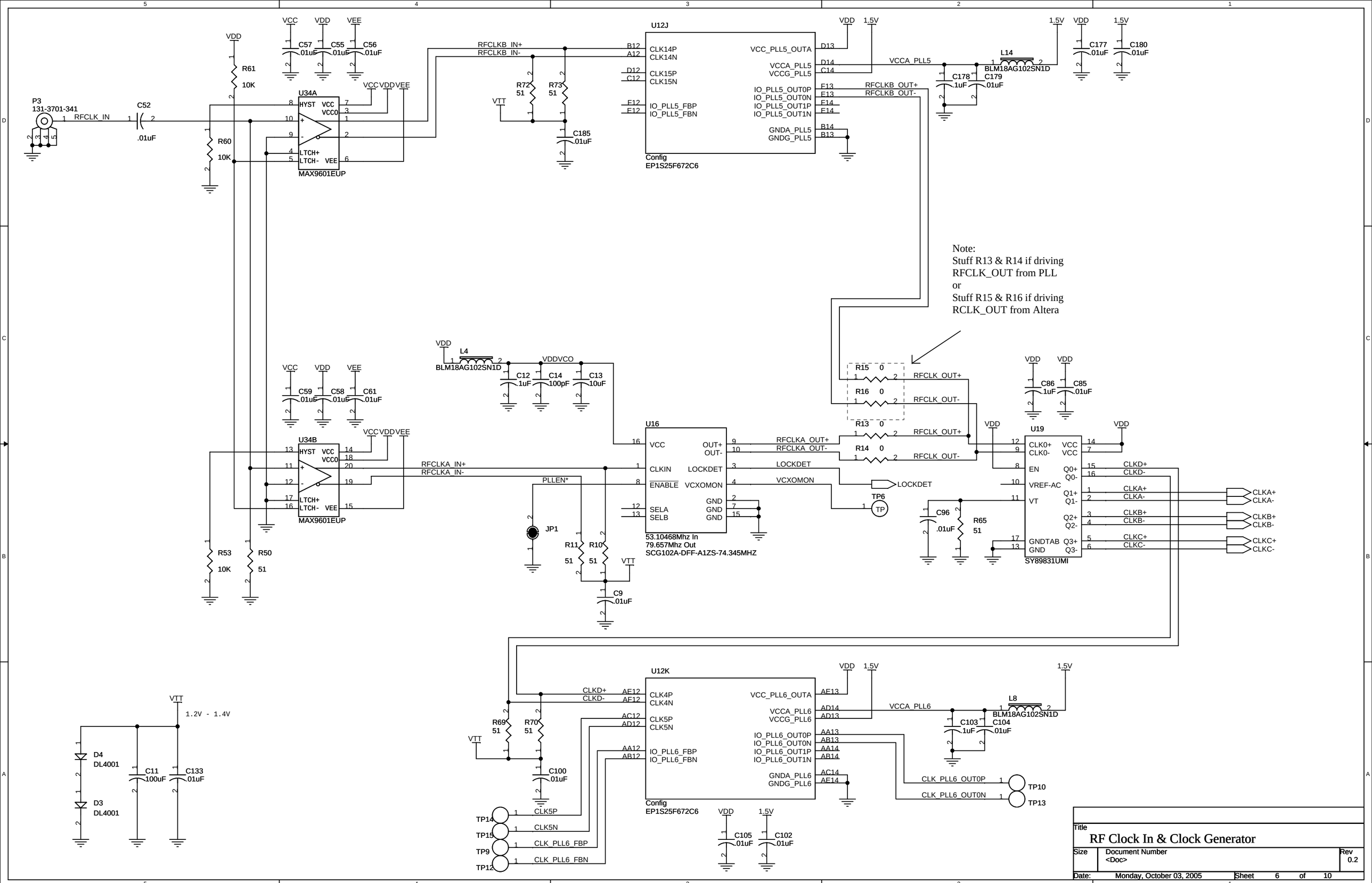

Title
RF Clock In & Clock Generator

Size	Document Number	Rev
	<Doc>	0.2

Date: Monday, October 03, 2005 Sheet 6 of 10

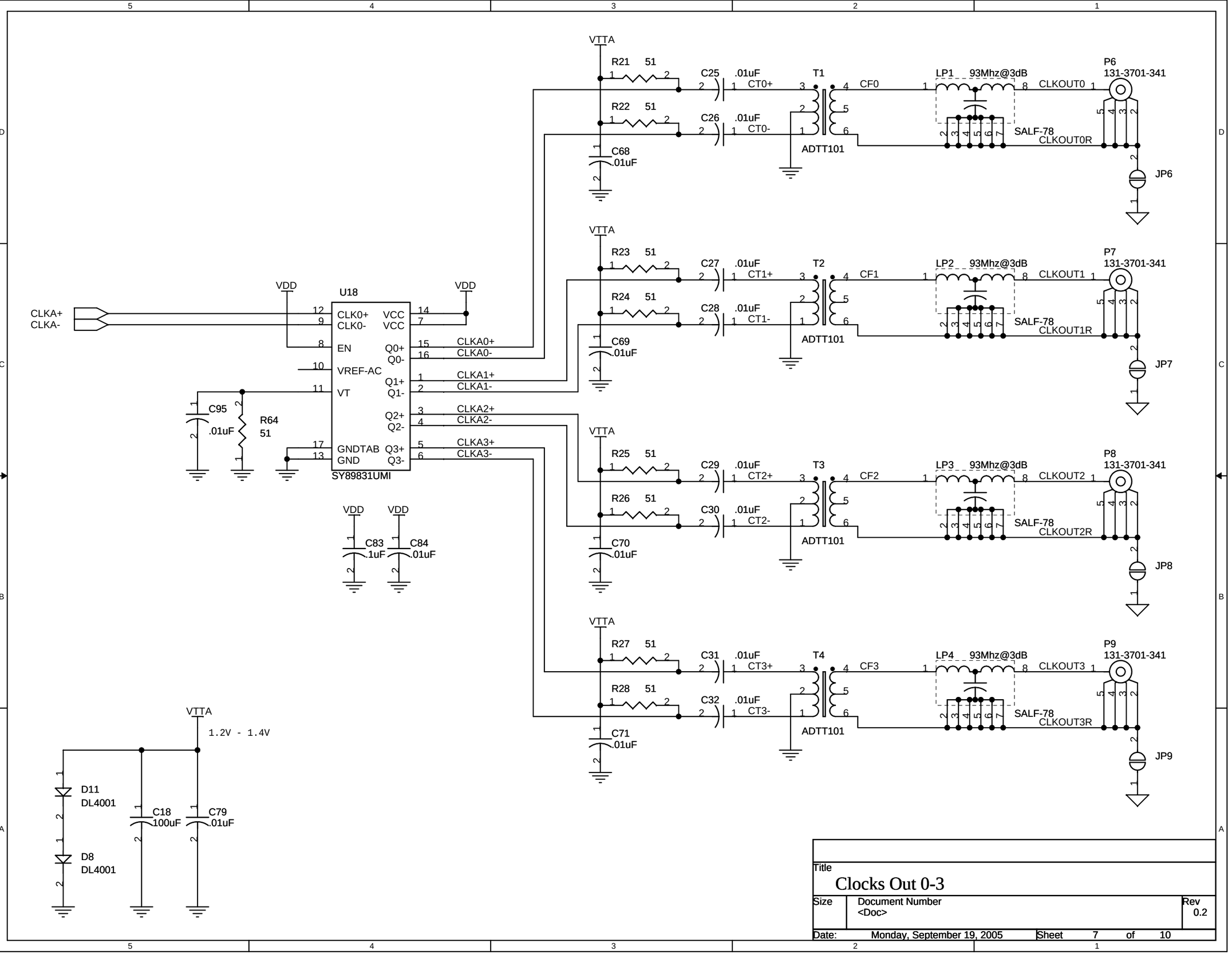

Title
Clocks Out 0-3

Size	Document Number	Rev
	<Doc>	0.2

Date: Monday, September 19, 2005 Sheet 7 of 10

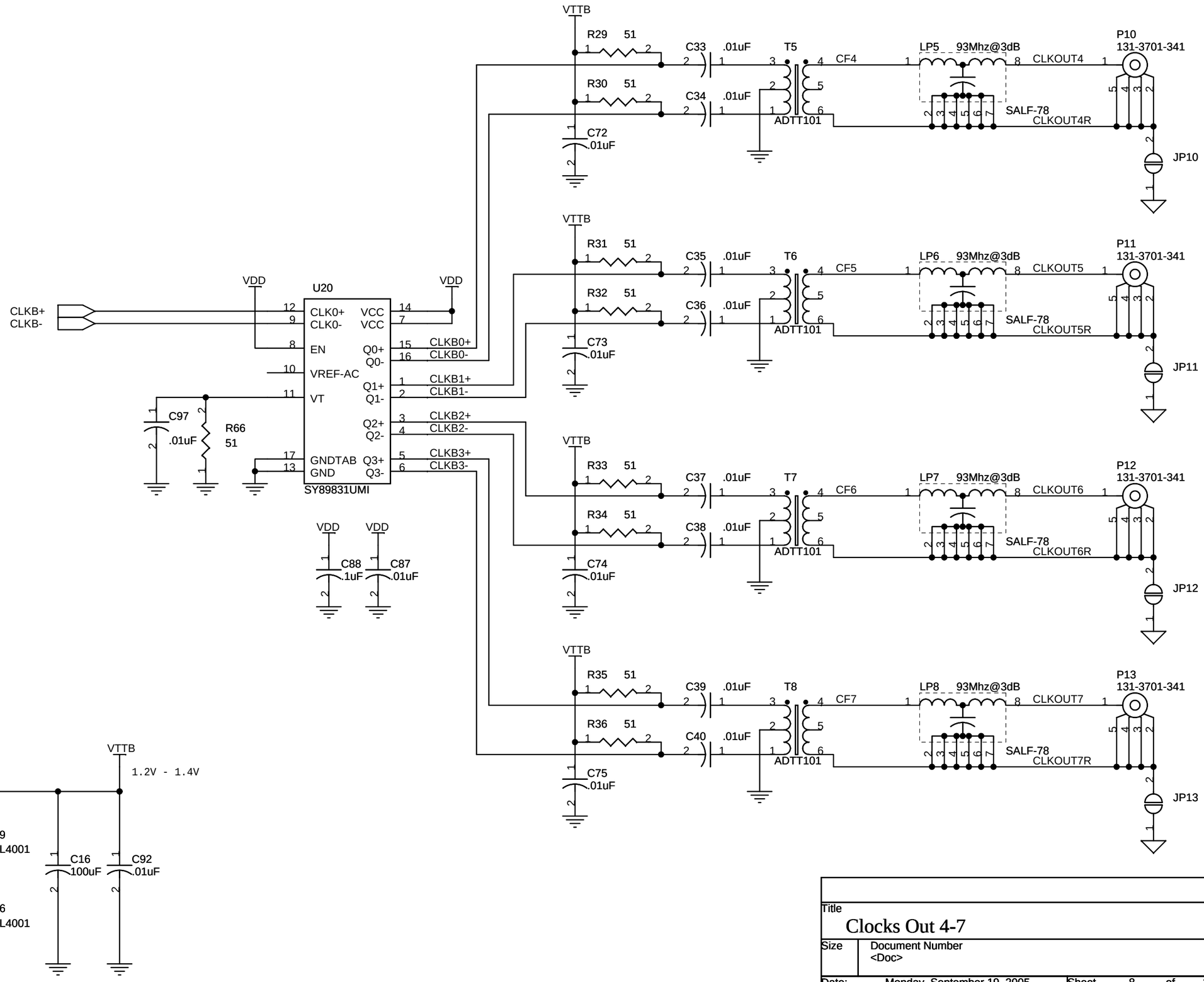

Title
Clocks Out 4-7

Size	Document Number	Rev
	<Doc>	0.2

Date: Monday, September 19, 2005 Sheet 8 of 10

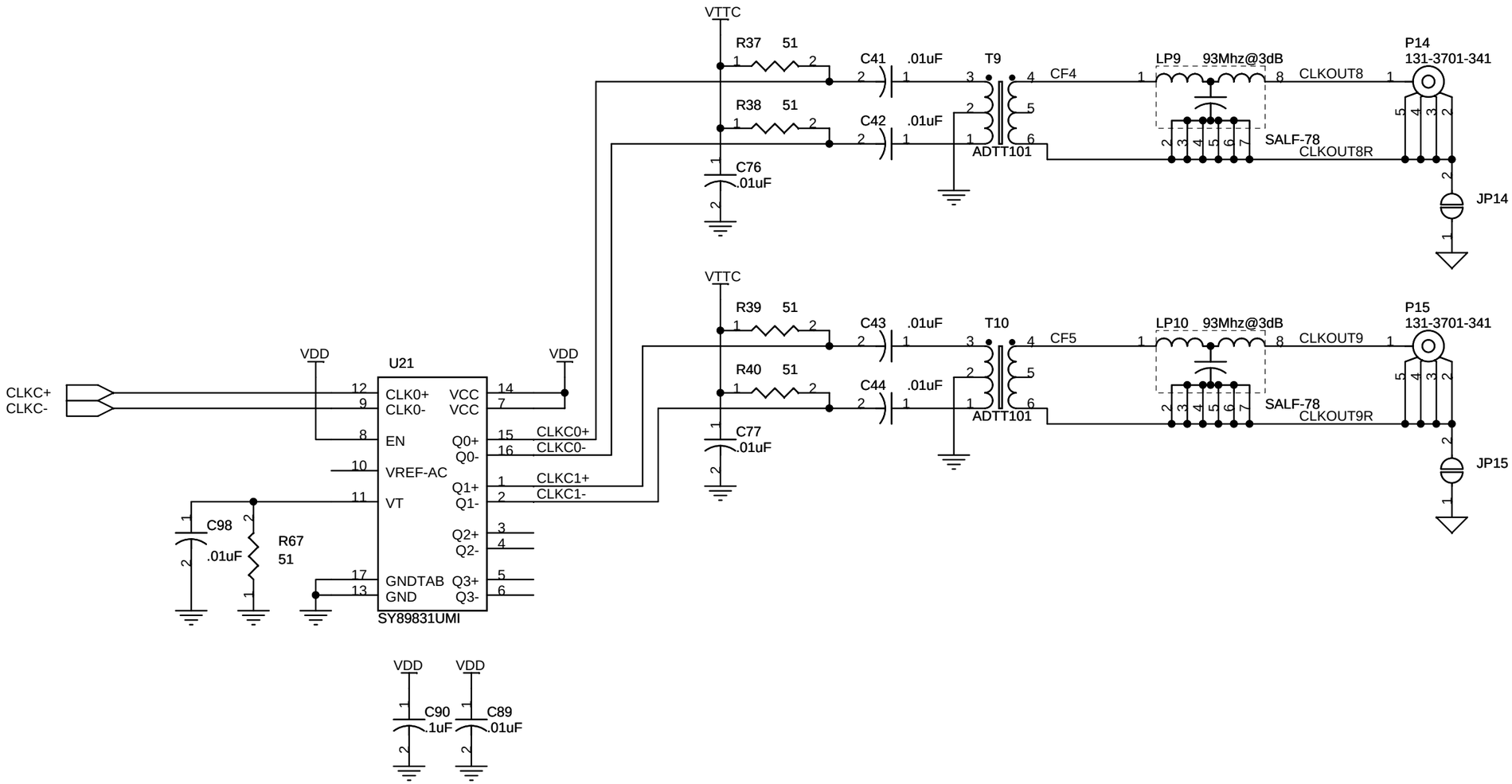

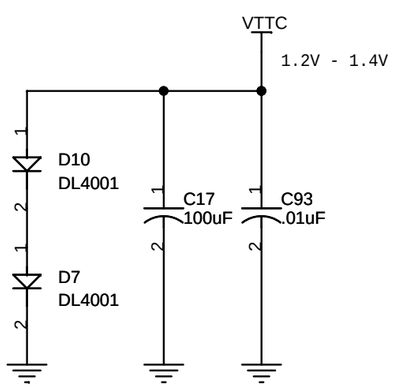

Title	Clocks Out 8-9		
Size	Document Number <Doc>		Rev 0.2
Date: Monday, September 19, 2005		Sheet 9 of 10	

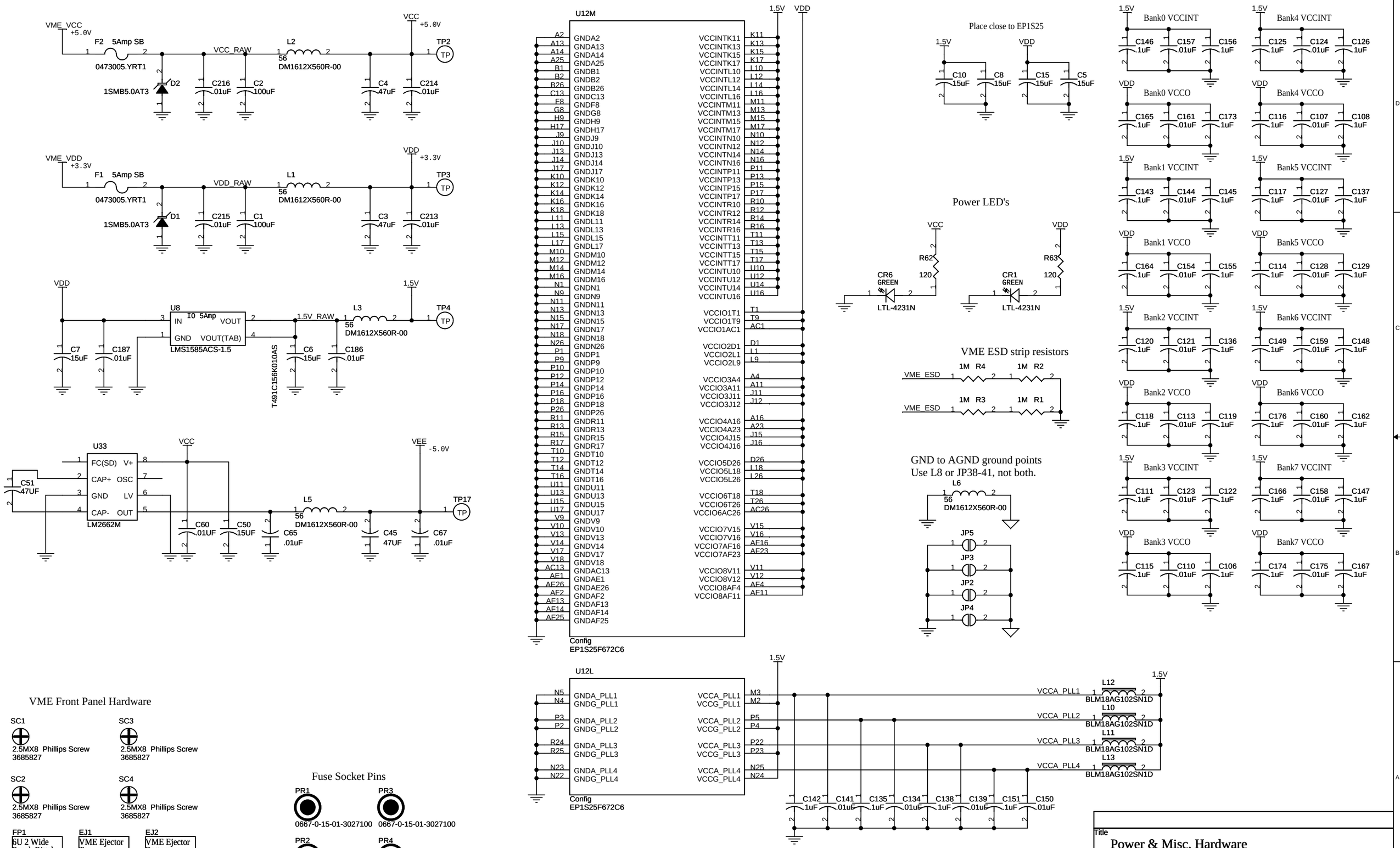

Title
Power & Misc. Hardware

Size	Document Number	Rev
	<Doc>	0.2

Date: Monday, September 19, 2005 Sheet 10 of 10