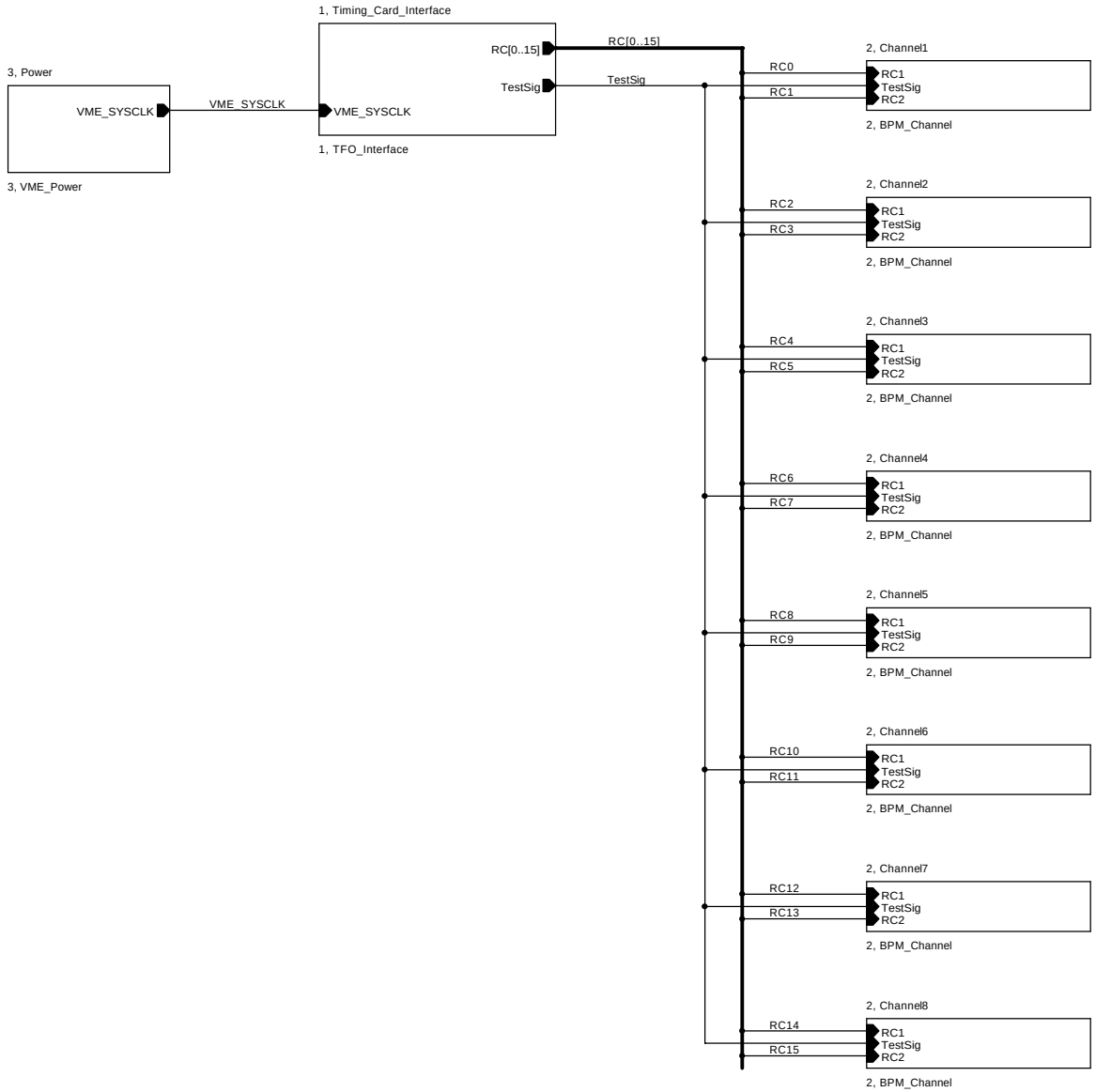

Title	BPM Diagnostic Card	
Size B	Document Number <Doc>	Rev 0
Date: 05/07/04 17:27:44	Sheet 1 of 11	

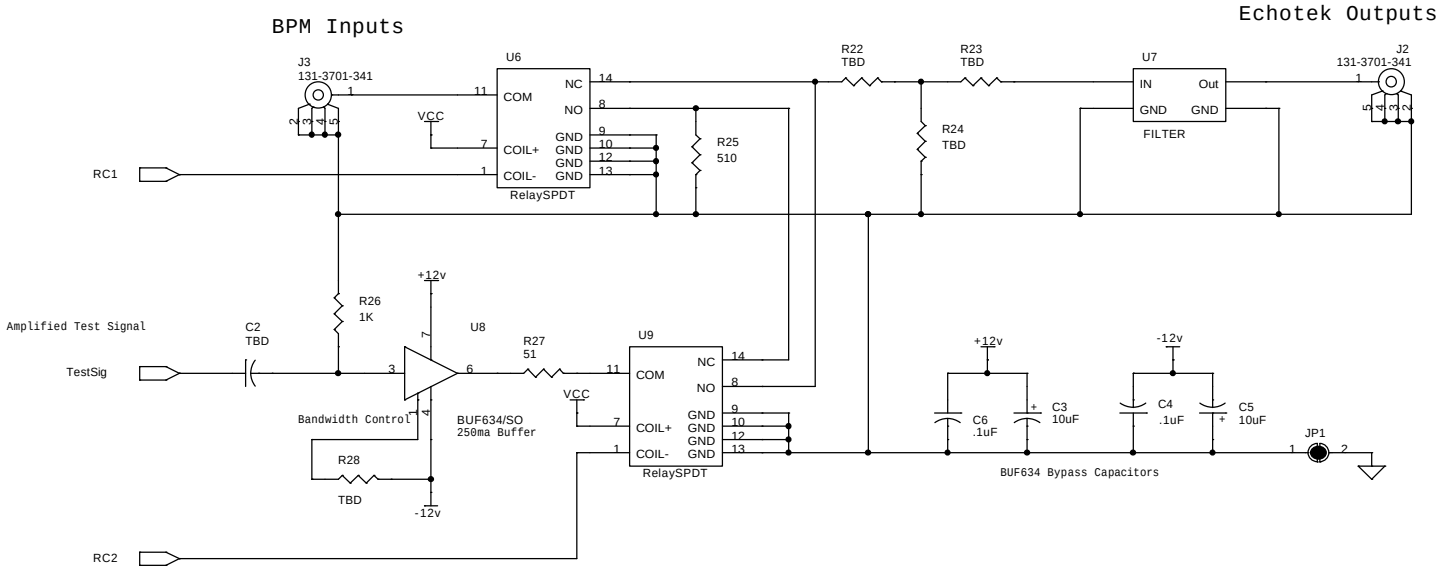

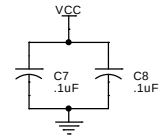

Relay Bypass Capacitors

Relay Settings Table

RC2	RC1	Source	Destination
1	1	BPM	Echotek
1	0	Test Signal	BPM
0	1	Test Signal	BPM & Echotek
0	0	Test Signal	Echotek

Notes: Relay is energized when RCx=0
Defualt state is RC0=1, RC1=1
Timming Fanout Card sends a 1 to
the relay driver to energize a relay.

Title	BPM Diagnostic Card - BPM Channel	
Size B	Document Number <Doc>	Rev 0
Date: 05/07/04 17:31:52	Sheet 2 of 11	

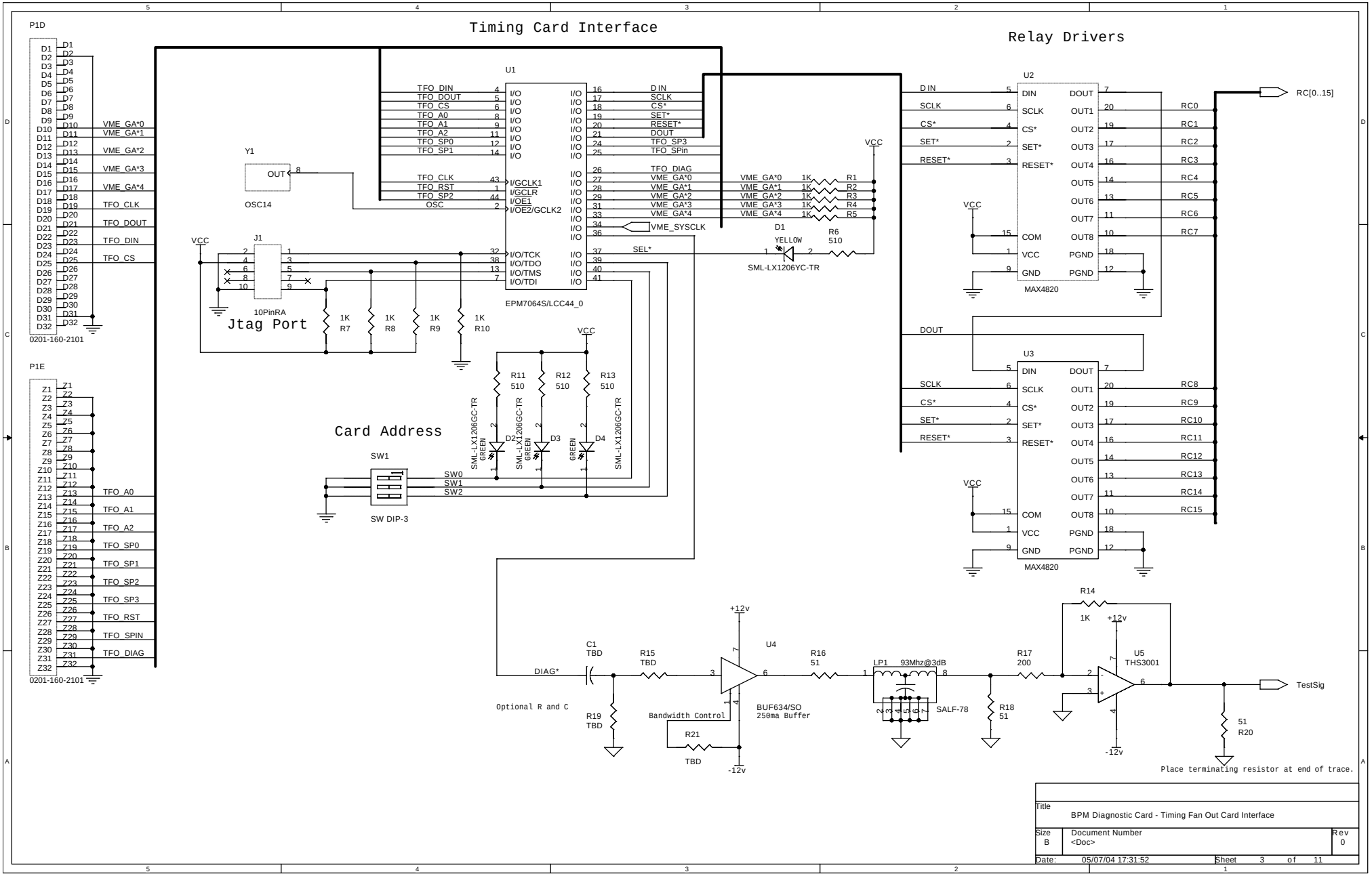
Timing Card Interface
Relay Drivers
P1D
0201-160-2101
P1E
0201-160-2101
U1
EPM7064S/LCC44_0
Y1
OSC14
J1
10PinRA
Jtag Port
Card Address
SW1
SW DIP-3
U2
U3
MAX4820
RC[0..15]
D1
YELLOW
SML-LX1206YC-TR
SML-LX1206GC-TR
GREEN
VCC
U4
BUF634/SO
250ma Buffer
Bandwidth Control
Optional R and C
LP1 93Mhz@3dB
SALF-78
U5
THS3001
TestSig
Place terminating resistor at end of trace.
Title
BPM Diagnostic Card - Timing Fan Out Card Interface
Size
B
Document Number
<Doc>
Rev
0
Date: 05/07/04 17:31:52
Sheet 3 of 11

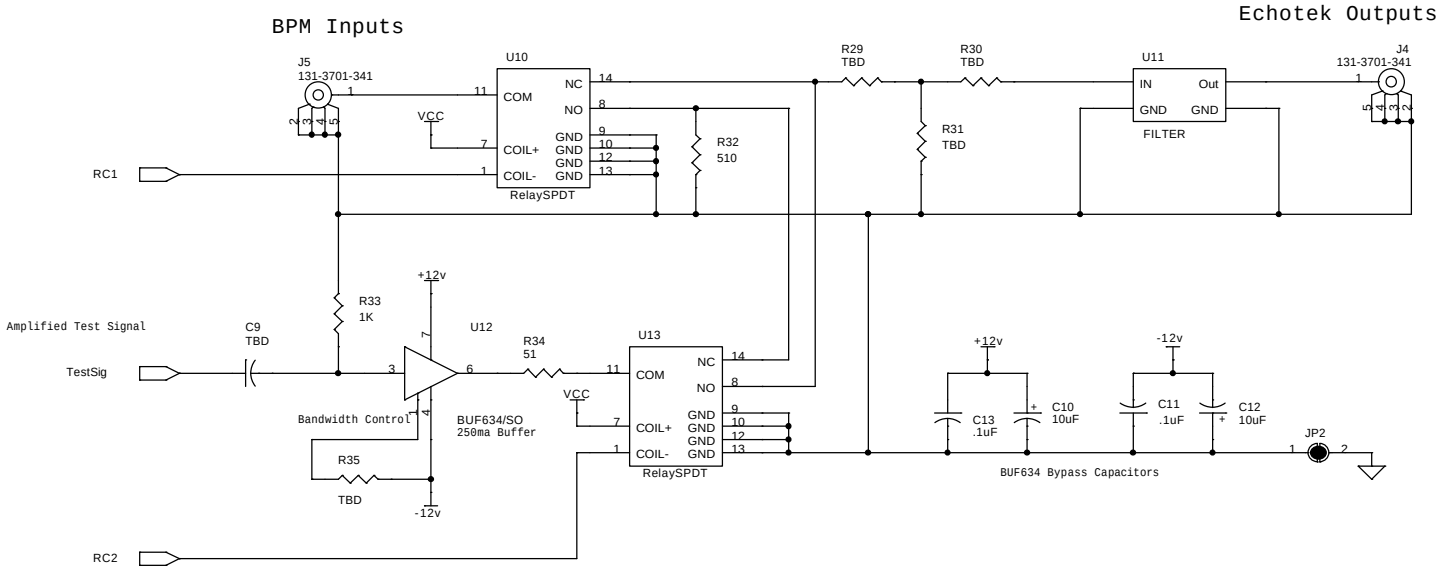

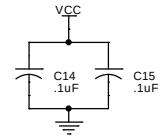

Relay Bypass Capacitors

Relay Settings Table

RC2	RC1	Source	Destination
1	1	BPM	Echotek
1	0	Test Signal	BPM
0	1	Test Signal	BPM & Echotek
0	0	Test Signal	Echotek

Notes: Relay is energized when RCx=0
Defualt state is RC0=1, RC1=1
Timming Fanout Card sends a 1 to
the relay driver to energize a relay.

Title	BPM Diagnostic Card - BPM Channel	
Size B	Document Number <Doc>	Rev 0
Date: 05/07/04 17:31:52	Sheet 4 of 11	

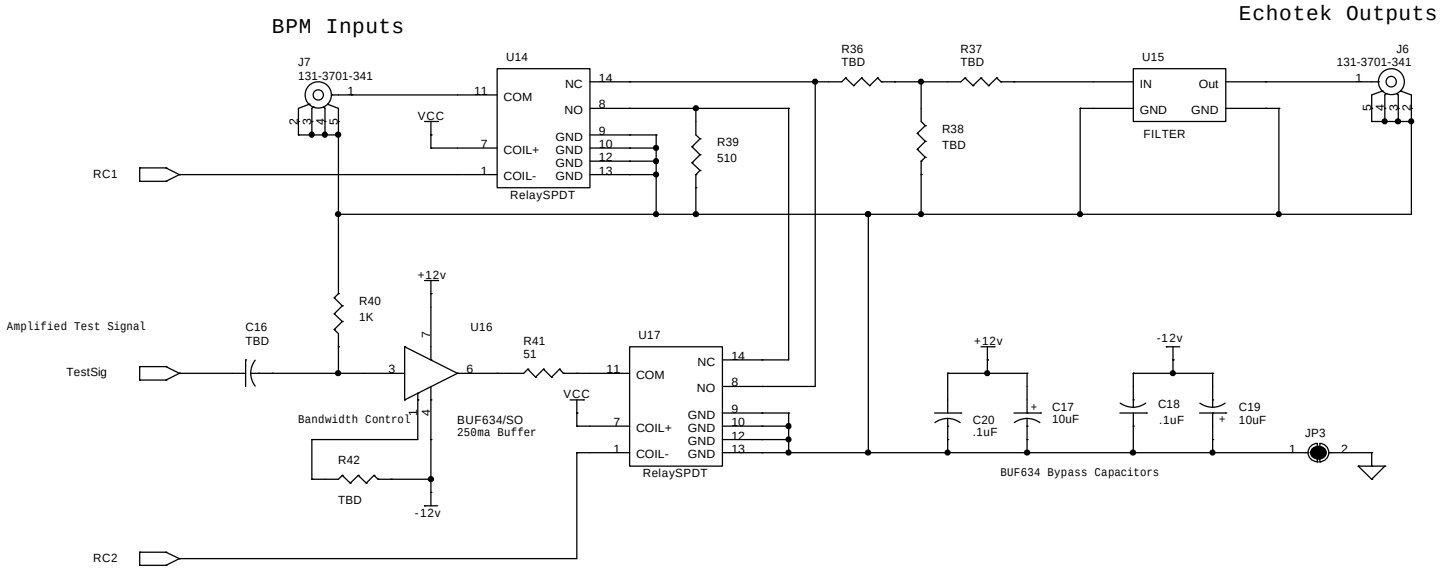

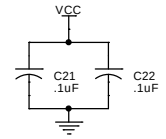

Relay Bypass Capacitors

Relay Settings Table

RC2	RC1	Source	Destination
1	1	BPM	Echotek
1	0	Test Signal	BPM
0	1	Test Signal	BPM & Echotek
0	0	Test Signal	Echotek

Notes: Relay is energized when RCx=0
Defualt state is RC0=1, RC1=1
Timming Fanout Card sends a 1 to
the relay driver to energize a relay.

Title	BPM Diagnostic Card - BPM Channel	
Size B	Document Number <Doc>	Rev 0
Date: 05/07/04 17:31:52	Sheet 5 of 11	

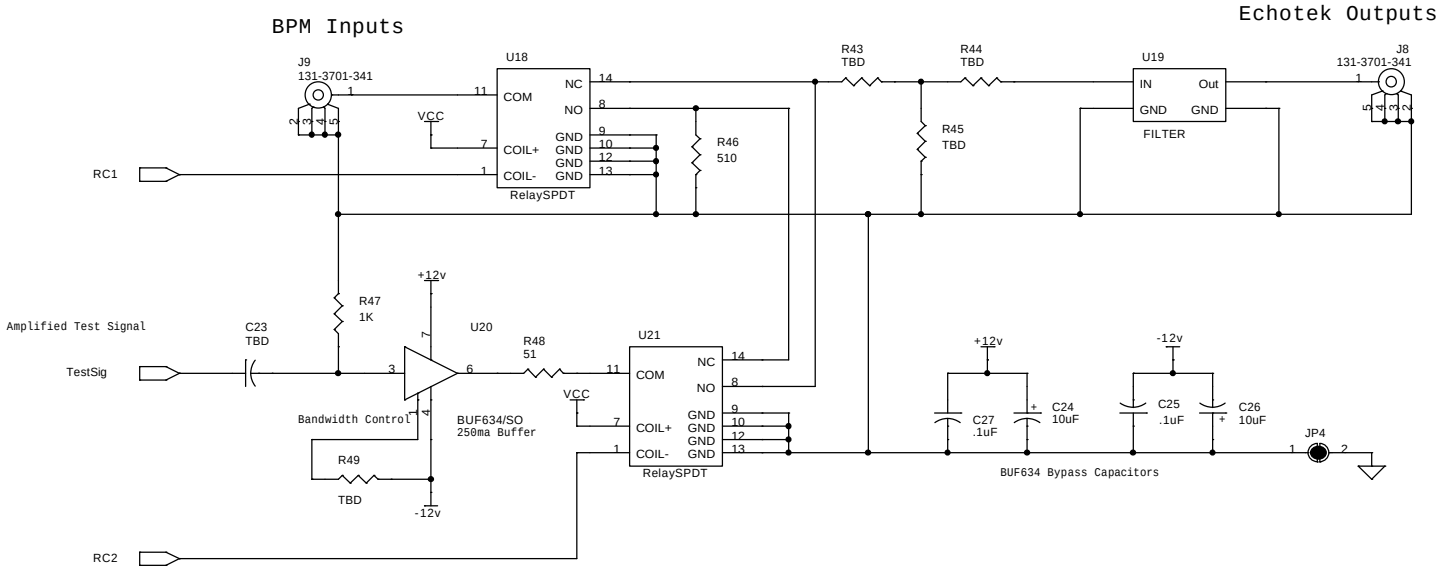

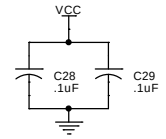

Relay Bypass Capacitors

Relay Settings Table

RC2	RC1	Source	Destination
1	1	BPM	Echotek
1	0	Test Signal	BPM
0	1	Test Signal	BPM & Echotek
0	0	Test Signal	Echotek

Notes: Relay is energized when RCx=0
Defualt state is RC0=1, RC1=1
Timming Fanout Card sends a 1 to
the relay driver to energize a relay.

Title	BPM Diagnostic Card - BPM Channel	
Size B	Document Number <Doc>	Rev 0
Date: 05/07/04 17:31:52	Sheet 6 of 11	

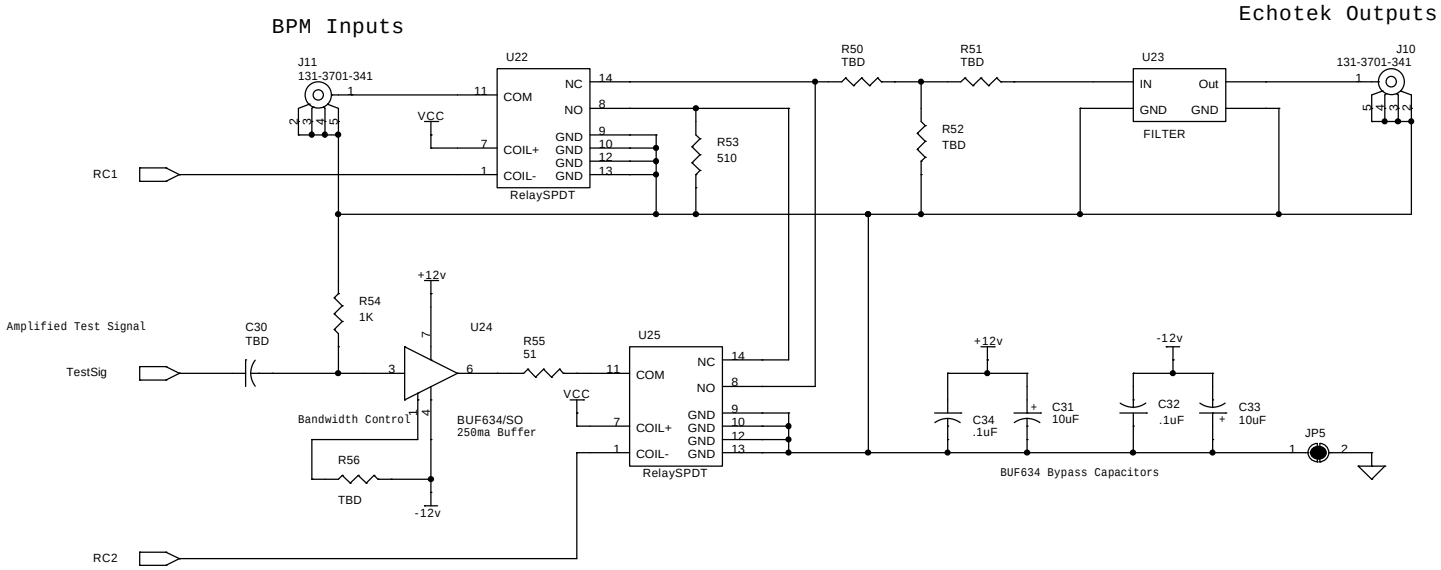

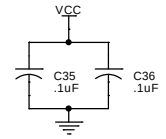

Relay Bypass Capacitors

Relay Settings Table

RC2	RC1	Source	Destination
1	1	BPM	Echotek
1	0	Test Signal	BPM
0	1	Test Signal	BPM & Echotek
0	0	Test Signal	Echotek

Notes: Relay is energized when RCx=0
Defualt state is RC0=1, RC1=1
Timming Fanout Card sends a 1 to
the relay driver to energize a relay.

Title	BPM Diagnostic Card - BPM Channel	
Size B	Document Number <Doc>	Rev 0
Date: 05/07/04 17:31:52	Sheet 7 of 11	

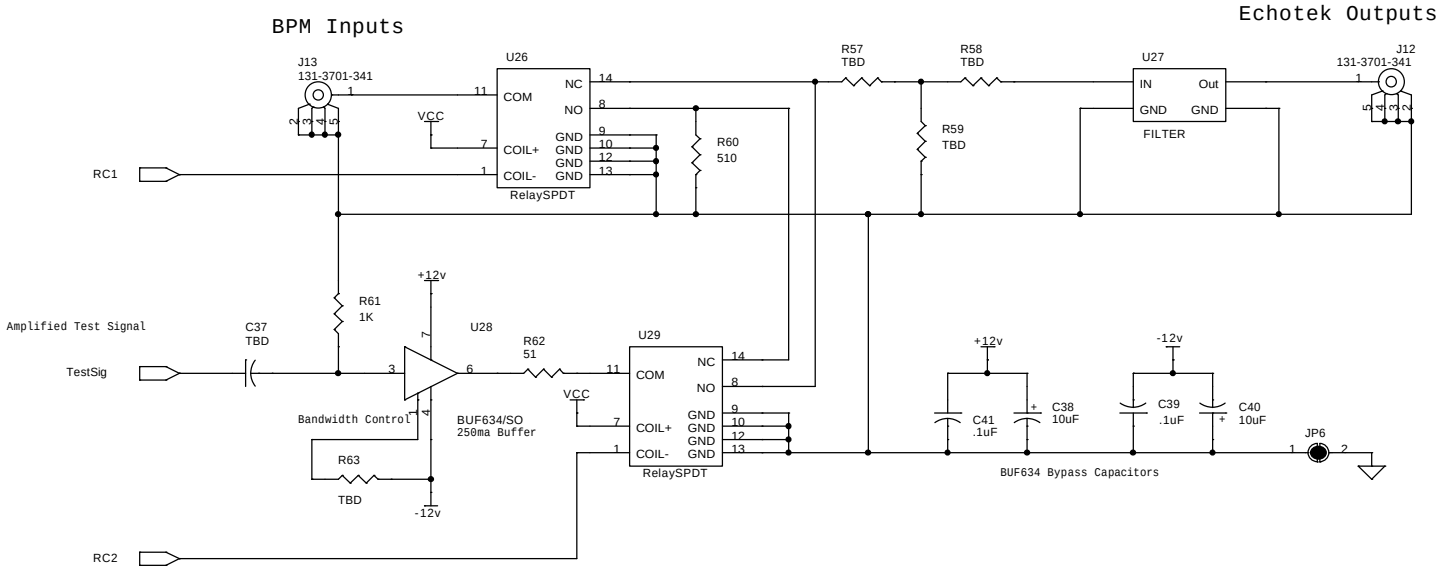

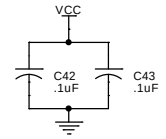

Relay Bypass Capacitors

Relay Settings Table

RC2	RC1	Source	Destination
1	1	BPM	Echotek
1	0	Test Signal	BPM
0	1	Test Signal	BPM & Echotek
0	0	Test Signal	Echotek

Notes: Relay is energized when RCx=0
Defualt state is RC0=1, RC1=1
Timming Fanout Card sends a 1 to
the relay driver to energize a relay.

Title	BPM Diagnostic Card - BPM Channel	
Size B	Document Number <Doc>	Rev 0
Date: 05/07/04 17:31:52	Sheet 8 of 11	

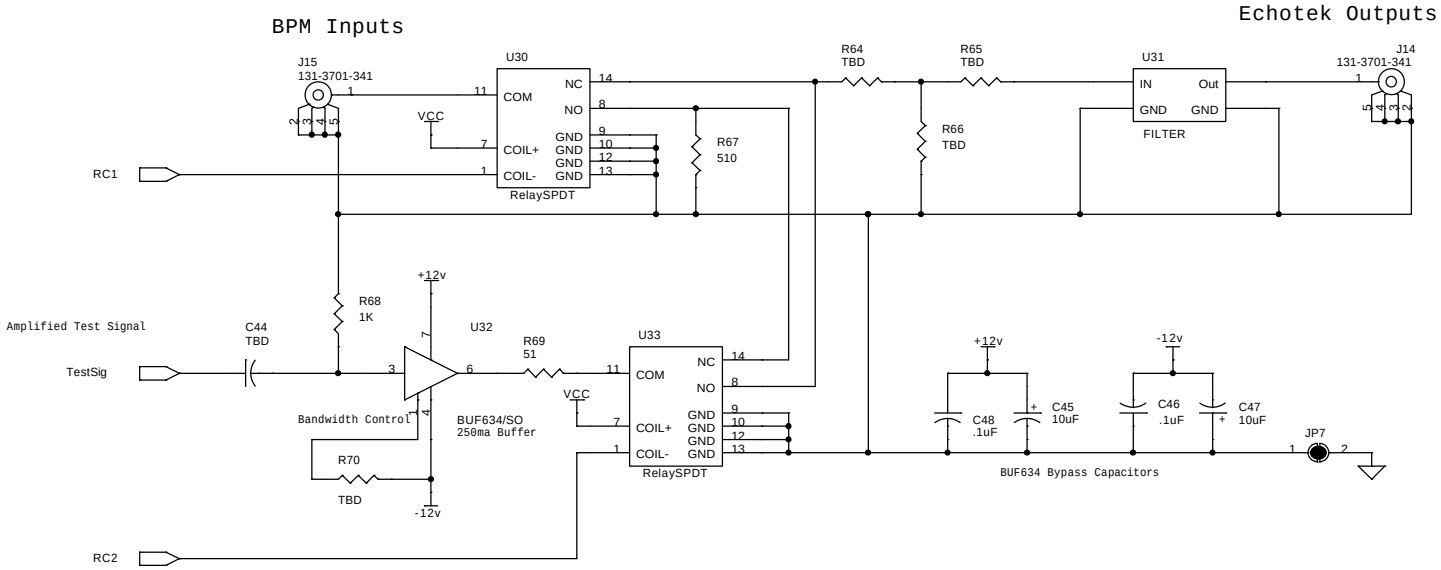

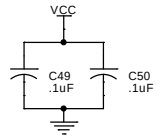

Relay Bypass Capacitors

Relay Settings Table

RC2	RC1	Source	Destination
1	1	BPM	Echotek
1	0	Test Signal	BPM
0	1	Test Signal	BPM & Echotek
0	0	Test Signal	Echotek

Notes: Relay is energized when RCx=0
Defualt state is RC0=1, RC1=1
Timming Fanout Card sends a 1 to
the relay driver to energize a relay.

Title	BPM Diagnostic Card - BPM Channel	
Size B	Document Number <Doc>	Rev 0
Date: 05/07/04 17:31:52	Sheet 9 of 11	

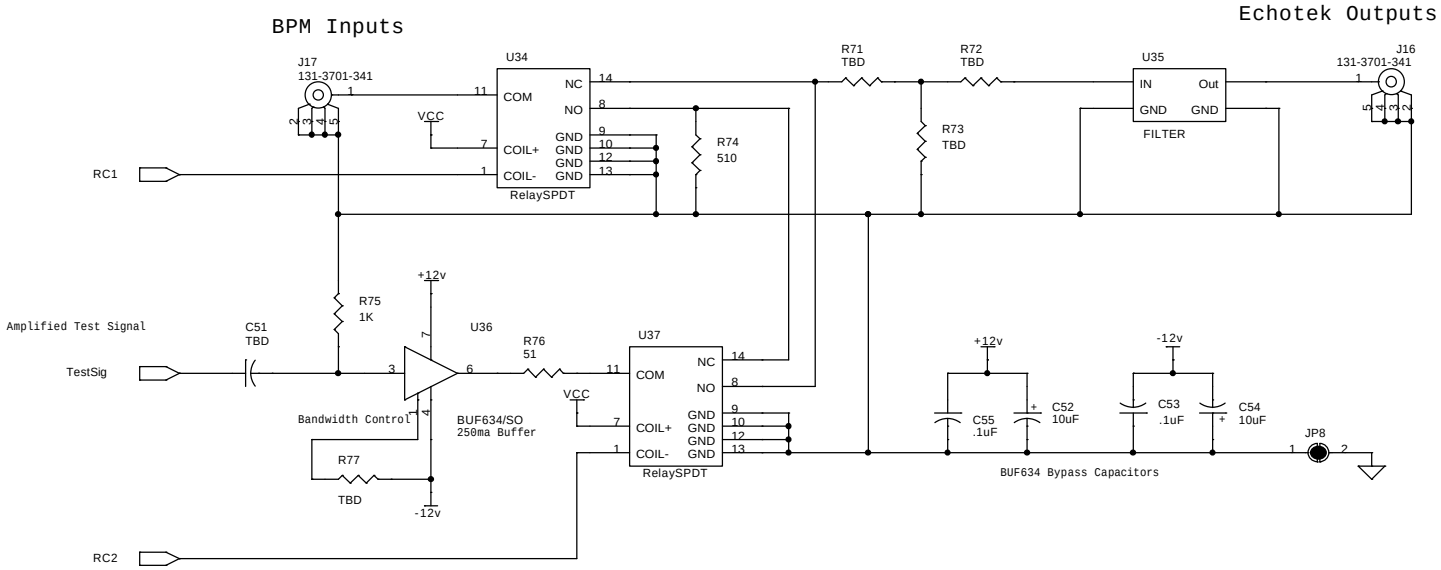

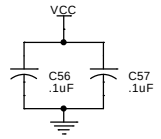

Relay Bypass Capacitors

Relay Settings Table

RC2	RC1	Source	Destination
1	1	BPM	Echotek
1	0	Test Signal	BPM
0	1	Test Signal	BPM & Echotek
0	0	Test Signal	Echotek

Notes: Relay is energized when RCx=0
Defualt state is RC0=1, RC1=1
Timming Fanout Card sends a 1 to
the relay driver to energize a relay.

Title	BPM Diagnostic Card - BPM Channel	
Size B	Document Number <Doc>	Rev 0
Date: 05/07/04 17:31:52	Sheet 10 of 11	

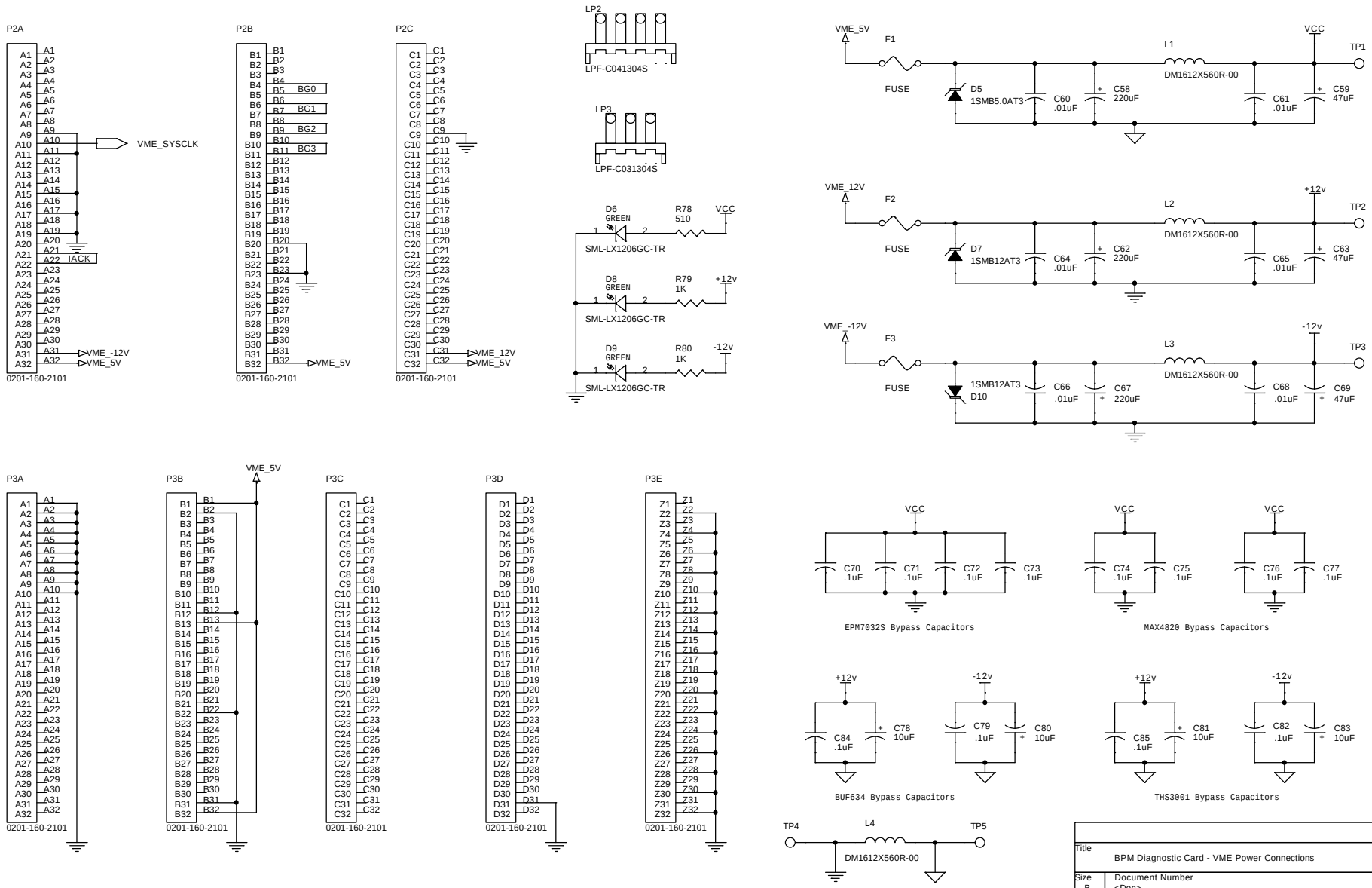

Title	BPM Diagnostic Card - VME Power Connections
Size B	Document Number <Doc>
Rev	0
Date: 05/07/04 17:28:24	Sheet 11 of 11